magicolor® 5450 User's Guide

4138-7763-05A
1800763-001E

Trademarks

KONICA MINOLTA, the KONICA MINOLTA logo and PageScope are trademarks or registered trademarks of KONICA MINOLTA HOLDINGS, INC.

magicolor is a trademark or registered trademark of KONICA MINOLTA PRINTING SOLUTIONS U.S.A., INC.

All other trademarks and registered trademarks are the property of their respective owners.

Copyright Notice

Copyright © 2005 KONICA MINOLTA BUSINESS TECHNOLOGIES, INC., Marunouchi Center Building, 1-6-1 Marunouchi, Chiyoda-ku, Tokyo, 100-0005, Japan. All Rights Reserved. This document may not be copied, in whole or part, nor transferred to any other media or language, without written permission of KONICA MINOLTA BUSINESS TECHNOLOGIES, INC.

Notice

KONICA MINOLTA BUSINESS TECHNOLOGIES, INC. reserves the right to make changes to this guide and to the equipment described herein without notice. Considerable effort has been made to ensure that this guide is free of inaccuracies and omissions. However, KONICA MINOLTA BUSINESS TECHNOLOGIES, INC. makes no warranty of any kind including, but not limited to, any implied warranties of merchantability and fitness for a particular purpose with regard to this guide. KONICA MINOLTA BUSINESS TECHNOLOGIES, INC. assumes no responsibility for, or liability for, errors contained in this guide or for incidental, special, or consequential damages arising out of the furnishing of this guide, or the use of this guide in operating the equipment, or in connection with the performance of the equipment when so operated.

SOFTWARE LICENSE AGREEMENT

This package contains the following materials provided by Konica Minolta Business Technologies, Inc. (KMBT): software included as part of the printing system, the digitally-encoded machine-readable outline data encoded in the special format and in the encrypted form (“Font Programs”), other software which runs on a computer system for use in conjunction with the Printing Software (“Host Software”), and related explanatory written materials (“Documentation”). The term “Software” shall be used to describe Printing Software, Font Programs and/or Host Software and also include any upgrades, modified versions, additions, and copies of the Software.

The Software is being licensed to you under the terms of this Agreement.

KMBT grants to you a non-exclusive sublicense to use the Software and Documentation, provided that you agree to the following:

1. You may use the Printing Software and accompanying Font Programs for imaging to the licensed output device(s), solely for your own internal business purposes.
2. In addition to the license for Font Programs set forth in Section 1 (“Printing Software”) above, you may use Roman Font Programs to reproduce weights, styles, and versions of letters, numerals, characters and symbols (“Typefaces”) on the display or monitor for your own internal business purposes.
3. You may make one backup copy of the Host Software, provided your backup copy is not installed or used on any computer. Notwithstanding the above restrictions, you may install the Host Software on any number of computers solely for use with one or more printing systems running the Printing Software.
4. You may assign its rights under this Agreement to an assignee of all of Licensee’s right and interest to such Software and Documentation (“Assignee”) provided you transfer to Assignee all copies of such Software and Documentation Assignee agrees to be bound by all of the terms and conditions of this Agreement.
5. You agree not to modify, adapt or translate the Software and Documentation.
6. You agree that you will not attempt to alter, disassemble, decrypt, reverse engineer or decompile the Software.
7. Title to and ownership of the Software and Documentation and any reproductions thereof shall remain with KMBT and its Licensor.
8. Trademarks shall be used in accordance with accepted trademark practice, including identification of the trademark owner’s name. Trademarks can only be used to identify printed output produced by the Software. Such use of any trademark does not give you any rights of ownership in that trademark.
9. You may not rent, lease, sublicense, lend or transfer versions or copies of the Software that the Licensee does not use, or Software contained on any unused media, except as part of the permanent transfer of all Software and Documentation as described above.
10. In no event will KMBT or its licensor be liable to you for any consequential, incidental INDIRECT, PUNITIVE or special damages, including any lost profits or lost saving, even if KMBT has been advised of the possibility of such damages, or for any claim by any third party. KMBT or its licensor disclaims all warranties with regard to the software, express or implied, including, without limitation implied warranties of merchantability, fitness for a particular purpose, title and non-infringement of third party rights. Some states or jurisdictions do not allow the exclusion or limitation of incidental, consequential or special damages, so the above limitations may not apply to you.

11. Notice to Government End Users: The Software is a “commercial item,” as that term is defined at 48 C.F.R.2.101, consisting of “commercial computer software” and “commercial computer software documentation,” as such terms are used in 48 C.F.R. 12.212. Consistent with 48 C.F.R. 12.212 and 48 C.F.R. 227.7202-1 through 227.7202-4, all U.S. Government End Users acquire the Software with only those rights set forth herein.
12. You agree that you will not export the Software in any form in violation of any applicable laws and regulations regarding export control of any countries.

About Adobe Color Profile

ADOBE SYSTEMS INCORPORATED
COLOR PROFILE LICENSE AGREEMENT

NOTICE TO USER: PLEASE READ THIS CONTRACT CAREFULLY. BY USING ALL OR ANY PORTION OF THE SOFTWARE YOU ACCEPT ALL THE TERMS AND CONDITIONS OF THIS SOFTWARE YOU ACCEPT ALL THE TERMS AND CONDITIONS OF THIS AGREEMENT. IF YOU DO NOT AGREE WITH THE TERMS OF THIS AGREEMENT, DO NOT USE THE SOFTWARE.

1. DEFINITIONS In this Agreement, “Adobe” means Adobe Systems Incorporated, a Delaware corporation, located at 345 Park Avenue, San Jose, California 95110. "Software" means the software and related items with which this Agreement is provided.
2. LICENSE Subject to the terms of this Agreement, Adobe hereby grants you the worldwide, non-exclusive, nontransferable, royalty-free license to use, reproduce and publicly display the Software. Adobe also grants you the rights to distribute the Software only (a) as embedded within digital image files and (b) on a standalone basis. No other distribution of the Software is allowed; including, without limitation, distribution of the Software when incorporated into or bundled with any application software. All individual profiles must be referenced by their ICC Profile description string. You may not modify the Software. Adobe is under no obligation to provide any support under this Agreement, including upgrades or future versions of the Software or other items. No title to the intellectual property in the Software is transferred to you under the terms of this Agreement. You do not acquire any rights to the Software except as expressly set forth in this Agreement.
3. DISTRIBUTION If you choose to distribute the Software, you do so with the understanding that you agree to defend, indemnify and hold harmless Adobe against any losses, damages or costs arising from any claims, lawsuits or other legal actions arising out of such distribution, including without limitation, your failure to comply with this Section 3. If you distribute the Software on a standalone basis, you will do so under the terms of this Agreement or your own license agreement which (a) complies with the terms and conditions of this Agreement; (b) effectively disclaims all warranties and conditions, express or implied, on behalf of Adobe; (c) effectively excludes all liability for damages on behalf of Adobe; (d) states that any provisions that differ from this Agreement are offered by you alone and not Adobe and (e) states that the Software is available from you or Adobe and informs licensees how to obtain it in a reasonable manner on or through a medium customarily used for software exchange. Any distributed Software will include the Adobe copyright notices as included in the Software provided to you by Adobe.

4. DISCLAIMER OF WARRANTY Adobe licenses the Software to you on an “AS IS” basis. Adobe makes no representation as to the adequacy of the Software for any particular purpose or to produce any particular result. Adobe shall not be liable for loss or damage arising out of this Agreement or from the distribution or use of the Software or any other materials. ADOBE AND ITS SUPPLIERS DO NOT AND CANNOT WARRANT THE PERFORMANCE OR RESULTS YOU MAY OBTAIN BY USING THE SOFTWARE, EXCEPT FOR ANY WARRANTY, CONDITION, REPRESENTATION OR TERM TO THE EXTENT TO WHICH THE SAME CANNOT OR MAY NOT BE EXCLUDED OR LIMITED BY LAW APPLICABLE TO YOU IN YOUR JURISDICTION, ADOBE AND ITS SUPPLIERS MAKE NO WARRANTIES, CONDITIONS, REPRESENTATIONS OR TERMS, EXPRESS OR IMPLIED, WHETHER BY STATUTE, COMMON LAW, CUSTOM, USAGE OR OTHERWISE AS TO ANY OTHER MATTERS, INCLUDING BUT NOT LIMITED TO NON-INFRINGEMENT OF THIRD PARTY RIGHTS, INTEGRATION, SATISFACTORY QUALITY OR FITNESS FOR ANY PARTICULAR PURPOSE. YOU MAY HAVE ADDITIONAL RIGHTS WHICH VARY FROM JURISDICTION TO JURISDICTION. The provisions of Sections 4, 5 and 6 shall survive the termination of this Agreement, howsoever caused, but this shall not imply or create any continued right to use the Software after termination of this Agreement.
5. LIMITATION OF LIABILITY IN NO EVENT WILL ADOBE OR ITS SUPPLIERS BE LIABLE TO YOU FOR ANY DAMAGES, CLAIMS OR COSTS WHATSOEVER OR ANY CONSEQUENTIAL, INDIRECT, INCIDENTAL DAMAGES, OR ANY LOST PROFITS OR LOST SAVINGS, EVEN IF AN ADOBE REPRESENTATIVE HAS BEEN ADVISED OF THE POSSIBILITY OF SUCH LOSS, DAMAGES, CLAIMS OR COSTS OR FOR ANY CLAIM BY ANY THIRD PARTY. THE FOREGOING LIMITATIONS AND EXCLUSIONS APPLY TO THE EXTENT PERMITTED BY APPLICABLE LAW IN YOUR JURISDICTION. ADOBE'S AGGREGATE LIABILITY AND THAT OF ITS SUPPLIERS UNDER OR IN CONNECTION WITH THIS AGREEMENT SHALL BE LIMITED TO THE AMOUNT PAID FOR THE SOFTWARE. Nothing contained in this Agreement limits Adobe’s liability to you in the event of death or personal injury resulting from Adobe’s negligence or for the tort of deceit (fraud). Adobe is acting on behalf of its suppliers for the purpose of disclaiming, excluding and/or limiting obligations, warranties and liability as provided in this Agreement, but in no other respects and for no other purpose.
6. TRADEMARKS Adobe and the Adobe logo are the registered trademarks or trademarks of Adobe in the United States and other countries. With the exception of referential use, you will not use such trademarks or any other Adobe trademark or logo without separate prior written permission granted by Adobe.
7. TERM This Agreement is effective until terminated. Adobe has the right to terminate this Agreement immediately if you fail to comply with any term hereof. Upon any such termination, you must return to Adobe all full and partial copies of the Software in your possession or control.
8. GOVERNMENT REGULATIONS If any part of the Software is identified as an export controlled item under the United States Export Administration Act or any other export law, restriction or regulation (the “Export Laws”), you represent and warrant that you are not a citizen, or otherwise located within, an embargoed nation (including without limitation Iran, Iraq, Syria, Sudan, Libya, Cuba, North Korea, and Serbia) and that you are not otherwise prohibited under the Export Laws from receiving the Software. All rights to use the Software are granted on condition that such rights are forfeited if you fail to comply with the terms of this Agreement.

9. GOVERNING LAW This Agreement will be governed by and construed in accordance with the substantive laws in force in the State of California as such laws are applied to agreements entered into and to be performed entirely within California between California residents. This Agreement will not be governed by the conflict of law rules of any jurisdiction or the United Nations Convention on Contracts for the International Sale of Goods, the application of which is expressly excluded. All disputes arising out of, under or related to this Agreement will be brought exclusively in the state Santa Clara County, California, USA.
10. GENERAL You may not assign your rights or obligations granted under this Agreement without the prior written consent of Adobe. None of the provisions of this Agreement shall be deemed to have been waived by any act or acquiescence on the part of Adobe, its agents, or employees, but only by an instrument in writing signed by an authorized signatory of Adobe. When conflicting language exists between this Agreement and any other agreement included in the Software, the terms of such included agreement shall apply. If either you or Adobe employs attorneys to enforce any rights arising out of or relating to this Agreement, the prevailing party shall be entitled to recover reasonable attorneys' fees. You acknowledge that you have read this Agreement, understand it, and that it is the complete and exclusive statement of your agreement with Adobe which supersedes any prior agreement, oral or written, between Adobe and you with respect to the licensing to you of the Software. No variation of the terms of this Agreement will be enforceable against Adobe unless Adobe gives its express consent, in writing, signed by an authorized signatory of Adobe.

ICC Profile for TOYO INK Standard Color on Coated paper (TOYO Offset Coated 2.0)

This ICC Profile (TOYO Offset Coated 2.0) characterizes Japanese offset press on Coated paper and is fully compatible with ICC profile format.

About “TOYO INK Standard Color on Coated paper”

This is the standard for color reproduction of sheet-fed offset press on Coated paper made by TOYO INK MFG.CO., LTD. (“TOYO INK”).
This standard is made from printing test with using TOYO INK’s sheet-fed offset printing inks and TOYO INK’s own printing conditions.
“TOYO INK Standard Color on Coated paper” is compatible with “JAPAN COLOR”.

Agreement

1. The reproduction of images on a printer or a monitor using this ICC Profile do not completely match the TOYO INK Standard Color on Coated paper.
2. Any and all copyrights of this ICC Profile shall remain in TOYO INK; therefore you shall not transfer, provide, rent, distribute, disclose, or grant any rights in this ICC Profile to any third party without the prior written consent of TOYO INK.
3. In no event will TOYO INK its directors, officers, employees or agents be liable to you for any consequential or incidential, either direct or indirect, damages(including damages for loss of business profits, business interruption, loss of business information, and the like)arising out of the use or inability to use this ICC Profile.
4. TOYO INK shall not be responsible for answering any question related to this ICC Profile.

5. All company names and product names used in this document is the trademarks or registered trademarks of their respective holder.

This ICC Profile made by GretagMacbeth ProfileMaker and granted TOYO INK certain license to distribute by GretagMacbeth AG.

TOYO Offset Coated 2.0 © TOYO INK MFG. CO., LTD. 2004

For EU member states only

This symbol means: **Do not dispose of this product together with your household waste!**

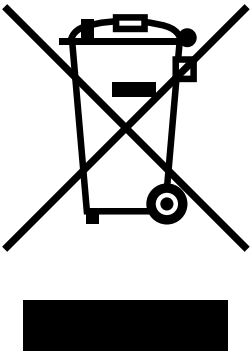

Please contact the Local Authority for appropriate disposal instructions. In the case of a new device being purchased, the used one can also be given to our dealer for appropriate disposal. Recycling of this product will help to conserve natural resources and prevent potential negative consequences for the environment and human health caused by inappropriate waste handling.

Contents

1 Introduction 1
Getting Acquainted with Your Printer 2
Space Requirements 2
Printer Parts 3
Front View 3
Rear View 4
Accessory 4
Front View with Options 4

2 About the Software 5
Software Utilities CD-ROM 6
PostScript Drivers 6
PCL Drivers 6
PPD Files 7
Utilities 7
System Requirements 9
Selecting Driver Options/Defaults (for Windows) 10
Windows XP/Server 2003/2000/NT 4.0 10
Windows Me/98SE (KONICA MINOLTA mc5450 PCL6) 11
Windows Me/98SE (KONICA MINOLTA mc5450 PPD) 12

Uninstalling the Printer Driver (for Windows) 13
Displaying Printer Driver Settings (for Windows) 14
Windows XP/Server 2003 14
Windows 2000/Me/98SE/NT 4.0 14
Using the Postscript and PCL Printer Driver 15
Common Buttons 15
OK 15
Cancel 15
Apply 15
Help 15
Easy Set 15
Paper View 16
Printer View 16
Watermark View 16
Quality View 16
Default 16
Advanced Tab (PostScript Printer Driver Only) 16
Basic Tab 17
Layout Tab 17
Cover Page Tab 18
Overlay Tab 18
Watermark Tab 18
Quality Tab 19
Version Tab 19
Limitations on printer driver functions installed with Point and Print 19
Using the Windows Me/98SE PPD File 20
Common Buttons 20
OK 20
Cancel 20
Apply 20
Restore Defaults 20
Paper Tab 20
Graphics Tab 21

3 Using the Status Monitor (Windows Only) 23
Working with the Status Monitor 24
Introduction 24
Operating Environment 24
Opening the Status Monitor 24
Using the Status Monitor 24
Recognizing Status Monitor Alerts 25
Recovering from a Status Monitor Alert 25
Closing the Status Monitor 25

4 Printer Control Panel and Configuration Menu 27
About the Control Panel 28
Control Panel Indicators and Keys 28
Message Window 30
Help Screens 30
Configuration Menu Overview 31
Main Menu 31
PROOF/PRINT MENU 32
Printing/Deleting a Stored Job 32
Entering the Password 34
PRINT MENU 35
PAPER MENU 37
QUALITY MENU 42
CAMERA DIRECT MENU 49
INTERFACE MENU 52
SYS DEFAULT MENU 55
SERVICE MENU 62

5 Camera Direct 63
Camera Direct 64
Printing Directly from a Digital Camera 64

6 Using Media 65
Media Specifications 66
Media Types 67
Plain Paper (Recycled Paper) 67
Thick Stock 68
Envelopes 69
Labels 70
Letterhead 71
Postcards 71
Transparencies 72
Glossy Stock 73
What Is the Guaranteed Imageable (Printable) Area? 74
Imageable Area—Envelopes 74
Page Margins 74
Loading Media 75
Tray 1 (Manual Feed Tray) 75
Loading Plain Paper 75
Other Media 77
Loading Envelopes 78
Loading Label Sheets/Postcards/Thick Stock/Glossy Stock and Transparencies 82
Tray 2 85
Loading Plain Paper 85
Tray 3/4 (Optional Lower Feeder Units) 87

Loading Plain Paper 87
Duplexing 90
Output Tray 91
Media Storage 92

7 Replacing Consumables 93
Replacing Consumables 94
About Toner Cartridges 94
Replacing a Toner Cartridge 97
Replacing the Waste Toner Bottle 102
Replacing the Transfer Roller 104
Replacing the Transfer Roller 105
Replacing the Ozone Filter 108
Replacing the Transfer Belt Unit 109
Replacing the Backup Battery 114

8 Maintaining the Printer 119
Maintaining the Printer 120
Cleaning the Printer 122
Exterior 122
Media Rollers 123
Cleaning the Media Feed Rollers (Tray 2/3/4) 123
Cleaning the Duplex Option Feed Rollers 124
Cleaning the Media Transfer Rollers for Tray 3 and 4 125
Cleaning the Laser Lens 126

9 Troubleshooting 127
Introduction 128
Printing a Configuration Page 128
Preventing Media Misfeeds 129
Understanding the Media Path 130
Clearing Media Misfeeds 131
Media Misfeed Messages and Clearing Procedures 132
Clearing a Media Misfeed in Tray 2 133
Clearing a Media Misfeed in Tray 3/4 137
Clearing a Media Misfeed from the Duplex Option 139
Clearing a Media Misfeed from the Fuser Unit 140
Clearing a Media Misfeed from Tray 1 (Manual Feed Tray) and Transfer Roller 143
Solving Problems with Media Misfeeds 146
Solving Other Problems 149
Solving Problems with Printing Quality 154
Status, Error, and Service Messages 160
Standard Status Messages 160
Error Messages (Warning: ⚠) 161
Error Messages (Operator Call: ⚠) 163

Service Messages: ⚠ 167

10 Installing Accessories 169
Introduction 170
Antistatic Protection 170
Dual In-Line Memory Module (DIMM) 171
Installing a DIMM 171
Hard Disk 174
Installing the Hard Disk 174
Duplex Option 178
Installing the Duplex Option 178
Lower Feeder Unit 181
Kit Contents 181
Installing a Lower Feeder Unit 181

A Appendix 185
Safety Specifications 186
Technical Specifications 186
Printer 186
Consumable Life Expectancy Chart 189
Our Concern for Environmental Protection 191
What is an ENERGY STAR product? 191

1 Introduction

Getting Acquainted with Your Printer

Space Requirements

To ensure easy operation, consumable replacement and maintenance, adhere to the recommended space requirements detailed below.

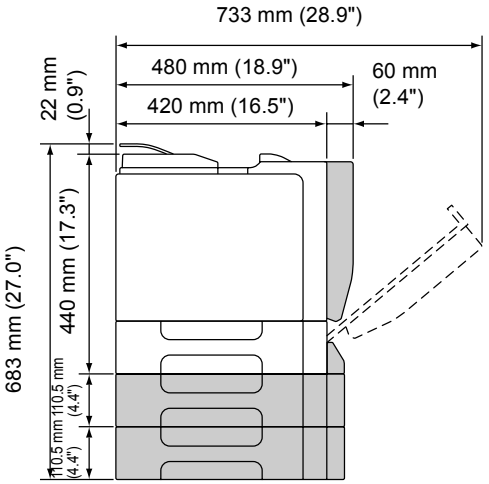

Front View

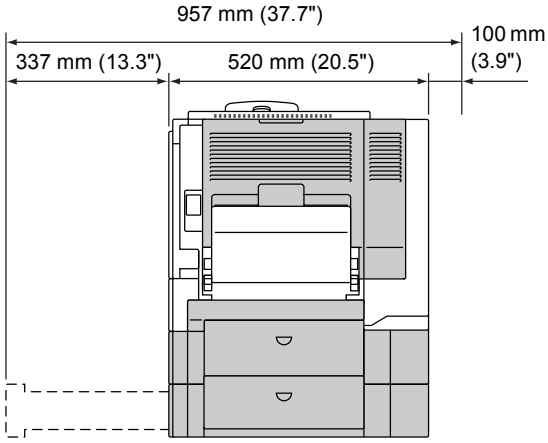

Side View

The options appear shaded in the above illustrations.

Printer Parts

The following drawings illustrate the parts of your printer referred to throughout this guide, so please take some time to become familiar with them.

Front View

1—Control panel
2—Output tray
3—Top cover
4—Fuser unit
5—Right side cover
6—Tray 1 (Manual feed tray)
7—Transfer roller
8—Transfer belt unit
9—Tray 2
10—Grip
11—Front cover
12—Waste toner bottle
13—Toner cartridge

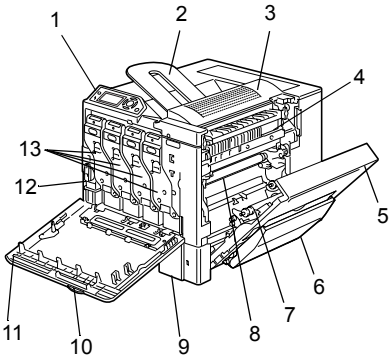

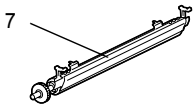

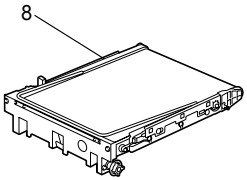

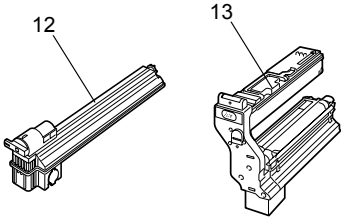

Rear View

1—KONICA MINOLTA Digital Camera Direct Print Port

2—Power switch

3—Ozone filter

4—Power connection

5—Parallel port

6—10Base-T/100Base-TX/ 1000Base-T Ethernet Interface port

7—USB port

8—Ventilation grilles

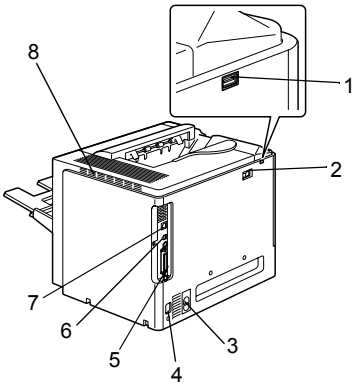

Accessory

1—Laser lens cleaning tool

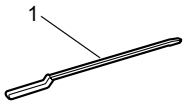

Front View with Options

1—Duplex option

2—Lower feeder units (Tray 3 and Tray 4)

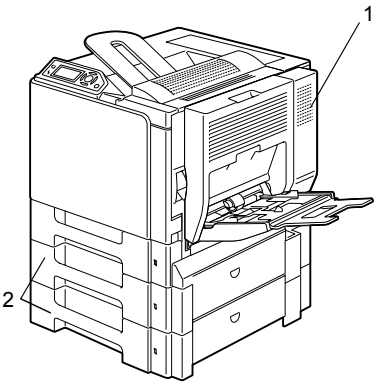

About the Software

2

Software Utilities CD-ROM

PostScript Drivers

Operating System	Use/Benefit
Windows XP/Server 2003/2000	These drivers give you access to all of the printer features, including finishing and advanced layout. See also “Displaying Printer Driver Settings (for Windows)” on page 14.
Windows NT 4.0	

When using Windows Me/98SE, use the PPD file for Windows Me/98SE. See also “Displaying Printer Driver Settings (for Windows)” on page 14.

A specific PPD file has been prepared for applications (such as PageMaker and Corel Draw) that require that a PPD file be specified when printing.
When specifying a PPD file while printing on Windows XP, Server 2003, 2000 and NT 4.0, use the specific PPD file provided on the Software Utilities CD-ROM in drivers\<operating_system>\PPD.

PCL Drivers

Operating System	Use/Benefit
Windows XP/Server 2003/2000	These drivers give you access to all of the printer features, including finishing and advanced layout. See also “Displaying Printer Driver Settings (for Windows)” on page 14.
Windows Me/98SE	
Windows NT 4.0	

PPD Files

Operating System	Use/Benefit
Windows XP/Server 2003/2000/Me/ 98SE/NT 4.0	These PPD files allow you to install the printer for a variety of platforms, drivers, and applications.
Macintosh OS 9/X	These files are required in order to use the printer driver for each operating system. For details of the Macintosh and Linux printer drivers, refer to the magicolor 5450 Reference Guide on the Documentation CD-ROM.
Linux	

For details on the installation of the Windows printer drivers, refer to the magicolor 5450 Installation Guide on the Documentation CD-ROM.

Utilities

Utility	Use/Benefit
Download Manager (Windows XP/Server 2003/2000/Me/ 98SE/NT 4.0, Macintosh OS 10.2.x or later)	This utility, which can be used only if the optional hard disk is installed, enables fonts and overlay data to be downloaded to the printer hard disk. For details, refer to the Download Manager online help for all of the functions.
Crown Print Monitor for Windows	Using the TCP/IP protocol, print jobs can be sent directly to the printer. For details, refer to the magicolor 5450 Reference Guide on the Documentation CD-ROM.
Status Monitor (Windows only)	The current status of the printer in addition to the status of consumables and error information can be viewed. For details, refer to See “Using the Status Monitor (Windows Only)” on page 23.

Utility	Use/Benefit
PageScope Net Care	Printer management functions such as status monitoring and network settings can be accessed. For details, refer to the PageScope Net Care Quick Guide on the Documentation CD-ROM.
PageScope Web Connection	With a Web browser, the status of printers can be checked, and the various settings can be changed. For details, refer to the magicolor 5450 Reference Guide on the Documentation CD-ROM.
PageScope Network Setup	Using the TCP/IP and IPX protocols, basic network printer settings can be specified. For details, refer to the PageScope Network Setup User Manual on the Documentation CD-ROM.
PageScope Plug and Print	This utility automatically detects a new printer connected to the network and creates a print object on the Windows print server. For details, refer to the PageScope Plug and Print Quick Guide on the Documentation CD-ROM.
PageScope NDPS Gateway	This network utility enables printers and KONICA MINOLTA multifunctional products to be used in an NDPS environment. For details, refer to the PageScope NDPS Gateway User Manual on the Documentation CD-ROM.
Peer to Peer Printing Tool	Setups for peer-to-peer printing in Windows 98 and Windows Me. Peer-to-peer printing refers to printing directly to a device on the network instead of through the server. For details, refer to the Peer to Peer Printing Tool Users Guide on the Software Utilities CD-ROM.

System Requirements

- Personal computer
  - Pentium 2: 400 MHz (Pentium 3: 500 MHz or higher is recommended)
  - Power Mac G3 or later (G4 or later is recommended)
- Operating System
  - Microsoft Windows XP Home Edition/Professional (Service Pack 1 or later; Service Pack 2 or later is recommended), Windows Server 2003, Windows 2000 (Service Pack 4 or later), Windows Me, Windows 98SE, Windows NT 4.0 (Service Pack 6)
  - Mac OS 9 (9.1 or later), Mac OS X (10.2 or later) Classic mode
  - Mac OS X (10.2 or later; We recommend installing the newest patch), Mac OS X Server (10.2 or later)
  - Red Hat Linux 9.0, SuSE Linux 8.2
- Free hard disk space
  - Approximately 20 MB of free hard disk space for printer driver and Status Monitor
  - Approximately 128 MB of free hard disk space for image processing
- RAM
  128 MB or more
- CD-ROM/DVD drive
- I/O interface
  - 10Base-T/100Base-TX/1000Base-T Ethernet interface port
  - USB Revision 2.0 compliant port
  - Parallel (IEEE 1284) port

For details of the Macintosh and Linux printer drivers, refer to the magicolor 5450 Reference Guide on the Documentation CD-ROM.

Selecting Driver Options/Defaults (for Windows)

Before you start working with your printer, you are advised to verify/change the default driver settings. Also, in case you have options installed, you should “declare” the options in the driver.

Windows XP/Server 2003/2000/NT 4.0

1 Choose the driver’s properties as follows:

- (Windows XP/Server 2003)
  From the **Start** menu, choose **Printers and Faxes** to display the **Printers and Faxes** directory. Right-click the KONICA MINOLTA mc5450 PCL6 or KONICA MINOLTA mc5450 PS printer icon and choose **Properties**.
- (Windows 2000/NT 4.0)
  From the **Start** menu, choose **Settings** and then **Printers** to display the **Printers** directory. Right-click the KONICA MINOLTA mc5450 PCL6 or KONICA MINOLTA mc5450 PS printer icon and choose **Properties**.

2 If you have installed options, proceed with the next step. Otherwise, skip to step 9.

3 Select the **Configure** tab.

4 Check that the installed options are correctly listed. If not, proceed with the next step. Otherwise, continue with step 8.

5 Click the **Refresh** to automatically configure installed options.

*The **Refresh** is available only if bi-directional communication is available with the printer; otherwise it is grayed out.*

6 From the **Device Options** list, select an option, one at a time, and then select **Enable** or **Disable** from the **Settings** menu.

*If **Printer Memory** is selected, select **256 MB**, **512 MB**, **768 MB** or **1024 MB**, according to the installed memory. The factory default setting is **256 MB**.*

7 Click **Apply**.

*Depending on the version of the operating system, **Apply** may not appear. If this is the case, continue with the next step.*

With Windows NT 4.0, right-click the KONICA MINOLTA mc5450 PCL6 printer icon or the KONICA MINOLTA mc5450 PS printer icon in the Printers directory, and then click ***Document Defaults****. Skip to step 10.*

8 Select the **General** tab.

9 Click **Printing Preferences**.
Printing Preference dialog box appears.

10 Select the default settings for your printer, such as the default media format you use, on the appropriate tabs.

11 Click **Apply**.

12 Click **OK** to exit from the Print preference dialog box.

13 Click **OK** to exit from the Properties dialog box.

Windows Me/98SE (KONICA MINOLTA mc5450 PCL6)

1 Choose the driver's properties as follows:

– From the **Start** menu, choose **Settings** and then **Printers** to display the **Printers** directory. Right-click the KONICA MINOLTA mc5450 PCL6 printer icon and choose **Properties**.

2 Select the **Configure** tab.

3 Check that the installed options are correctly listed. If not, proceed with the next step. Otherwise, continue with step 7.

4 Click the **Refresh** to automatically configure installable options.

The ***Refresh*** *is available only if bi-directional communication is available with the printer, otherwise it is grayed out.*

5 From the **Device Options** list, select an option, one at a time, and then select **Enable** or **Disable** from the **Settings** menu.

If ***Printer Memory*** *is selected, select* ***256 MB****,* ***512 MB****,* ***768 MB*** *or* ***1024 MB****, according to the installed memory. The factory default setting is* ***256 MB****.*

6 Click **Apply**.

7 Select the default settings for your printer, such as the default media format you use, on the appropriate tabs.

8 Click **Apply**.

9 Click **OK**.

Windows Me/98SE (KONICA MINOLTA mc5450 PPD)

1 Choose the driver's properties as follows:

- From the **Start** menu, choose **Settings** and then **Printers** to display the **Printers** directory. Right-click the KONICA MINOLTA mc5450 PPD printer icon and choose **Properties**.

2 Select the **Device Options** tab.

3 Check that the installed options are correctly listed. If not, proceed with the next step. Otherwise, continue with step 6.

4 From the **Installable options** list, select an option, one at a time, and then select **Enable or Disable** from the **Change setting for:** menu.

*If **VMOption** is selected, select **256 MB**, **512 MB**, **768 MB** or **1024 MB**, according to the installed memory. The factory default setting is **256 MB**.*

5 Click **Apply**.

6 Select the default settings for your printer, such as the default media format you use, on the appropriate tabs.

7 Click **Apply**.

8 Click **OK**.

Uninstalling the Printer Driver (for Windows)

This section describes how to uninstall the KONICA MINOLTA mc5450 printer driver if necessary.

1 Close all applications.

2 Open the **Printers** directory.

- (Windows XP/Server 2003)
  From the **Start** menu, choose **Printers and Faxes** to display the **Printers and Faxes** directory.
- (Windows 2000/Me/98SE/NT 4.0)
  From the **Start** menu, choose **Settings** and then **Printers** to display the **Printers** directory.

3 Right-click the KONICA MINOLTA mc5450 PCL6 or KONICA MINOLTA mc5450 PS printer icon or KONICA MINOLTA mc5450 PPD printer icon and choose **Delete**.

4 Click **Yes** to verify the driver deletion.

When using Windows Me/98SE/NT 4.0, Skip to Step 8.

5 (Windows XP/Server2003/2000) Select **File / Server Properties** from the menu.

6 (Windows XP/Server2003/2000) Go to the **Driver** tab and select KONICA MINOLTA mc5450 PCL6 or KONICA MINOLTA mc5450 PS driver and then click **Remove**.

7 (Windows XP/Server2003/2000) Click **Yes** to verify the driver removal.

8 Restart your computer.

9 The KONICA MINOLTA mc5450 printer driver will be uninstalled from your computer.

Displaying Printer Driver Settings (for Windows)

Windows XP/Server 2003

1 From the **Start** menu, choose **Printers and Faxes** to display the **Printers and Faxes** directory.

2 Right-click the KONICA MINOLTA mc5450 PCL6 or KONICA MINOLTA mc5450 PS printer icon and choose **Printing Preferences**.

Windows 2000/Me/98SE/NT 4.0

1 From the **Start** menu, point to **Settings**, and then click **Printers** to display the **Printers** directory.

2 Display the printer driver settings:

- **Windows 2000**—Right-click the KONICA MINOLTA mc5450 PCL6 or KONICA MINOLTA mc5450 PS printer icon and choose **Printer Properties**.
- **Windows Me/98SE**—Right- click the KONICA MINOLTA mc5450 PCL6 or KONICA MINOLTA mc5450 PPD printer icon and choose **Properties**.
- **Windows NT 4.0**—Right-click the KONICA MINOLTA mc5450 PCL6 or KONICA MINOLTA mc5450 PS printer icon and choose **Document Defaults**.

Using the Postscript and PCL Printer Driver

When using KONICA MINOLTA mc5450 PCL6 printer driver on Windows Me/98SE, a tab for specifying printer settings appears in the dialog box.
For details on using KONICA MINOLTA mc5450 PPD on Windows Me/98SE, refer to "Using the Windows Me/98SE PPD File" on page 20.

Common Buttons

The buttons described below appear on each tab.

OK

Click to exit the Properties dialog box, saving any changes made.

Cancel

Click to exit the Properties dialog box without saving any changes made.

Apply

Click to save all changes without exiting the Properties dialog box.

*Depending on the version of the operating system, **Apply** may not appear.*

Help

Click to view the help.

Easy Set

This allows the current settings to be saved. To save the current settings, specify the desired settings, and then click **Save**. Specify the settings described below, and the click **OK**.

- **Name:** Type in the name of the settings to be saved.
- **Comment:** Add a simple comment to the settings to be saved.
- **Sharing:** Specify whether or not the settings to be saved can be used by other users logged onto the computer.

Afterward, the saved settings can be selected from the drop-down list. To change the registered setting, click **Edit**.

Select **Defaults** from the drop-down list to reset the functions in all tabs to their default values.

Paper View

Click the button to display a sample of the page layout in the figure area.

*This button does not appear on the **Advanced**, **Watermark**, **Quality**, and **Version** tabs.*

Printer View

Click the button to display an image of the printer (with all installed options) in the figure area.

*This button does not appear on the **Advanced** and **Version** tabs.*

Watermark View

Click this button to display a preview of the watermark.

*This button appears only when the **Watermark** tab is selected.*

Quality View

Click this button to display a sample of the settings selected in the **Quality** tab.

*This button appears only when the **Quality** tab is selected.*

Default

Click this button to reset the settings to their defaults.

*This button does not appear on the **Advanced** and **Version** tabs.*

Advanced Tab (PostScript Printer Driver Only)

The Advanced Tab allows you to

- Specify the PostScript output method
- Specify whether or not the error messages of a print job are printed
- Print a mirror image
- Specify whether or not the application can directly output PostScript data

Basic Tab

The Basic Tab allows you to

- Specify the orientation of the media
- Specify the size of the original document
- Select the output media size
- Zoom (expand/reduce) documents
- Specify the paper source
- Specify the type of media
- Specify the number of copies
- Turn on/off job collation
- Save a print job on the printer and print it later (Job Retention)
- Save a confidential job on the printer and protect it with a password
- Print a single copy for proofing
- Send a notification by e-mail when printing is finished
- Specify user information such as e-mail addresses and passwords
- Print on the back side of paper that has already been printed on

Use paper that has been printed on with magicolor 5450.
In addition, the page printed with this setting is not guaranteed.

Do not use the following types of paper.
- Paper that has been printed on with an inkjet printer
- Paper that has been printed on with a monochrome/color lase printer/copier
- Paper that has been printed on with any other printer or fax machine

Layout Tab

The Layout Tab allows you to

- Print several pages of a document on the same page (N-up printing)
- Specify booklet printing
- Rotate the print image 180 degrees
- Specify duplex printing
- Specify whether or not blank pages are printed (PCL printer driver only)
- Adjust the binding margin (PCL printer driver only)
- Adjust the printing position (PCL printer driver only)

Cover Page Tab

The Cover Page Tab allows you to

- Print front and back cover pages and separator pages
- Specify the paper tray that contains the paper for the front and back cover pages and separator pages

Overlay Tab

Be sure to use overlays with print jobs with a paper size and orientation that matches the overlay form.
In addition, if settings have been specified for "N-up" or "Booklet" in the printer driver, the overlay form cannot be adjusted to match the specified settings.

The Overlay Tab allows you to

- Select the form to use
- Add or delete overlay files
- Launch Download Manager to download a form (PostScript printer driver only)

Download Manager Application should be installed earlier.

- Create a form (PCL printer driver only)
- Specify that the document and form are printed overlapping (PCL printer driver only)
- Display the form information (PCL printer driver only)
- Print the form on All Pages, First Page, Even Pages and Odd Pages
- Place the form in back of the document or in front on the printed document (PCL printer driver only)

Watermark Tab

The Watermark Tab allows you to

- Select the watermark to be used
- Create, edit or delete watermarks
- Lighten the density of the watermark
- Print the watermark on only the first page
- Print the watermark repeatedly throughout the all pages

Quality Tab

The Quality Tab allows you to

- Switch between color and grayscale printing
- Control the darkness of an image (Brightness)
- Specify the printer color settings (Quick Color)
- Specify the resolution for the printout
- Perform color separation
- Specify the format of fonts that are to be downloaded
- Print using the printer's fonts
- Control the tones of an image (Contrast) (PCL printer driver only)
- Specify the image compression method (PCL printer driver only)

Version Tab

The Version Tab allows you to view information about the printer driver.

Limitations on printer driver functions installed with Point and Print

If Point and Print is performed with the following server and client combinations, there are limitations on some printer driver functions.

- Server and client combinations
  Server: Windows Server 2003/XP/2000
  Client: Windows NT 4.0
- Functions with limitations applied
  Booklet, Skip Blank Pages, Front Cover Page, Back Cover Page, Separator Page, Create Overlay, Print Overlay, Watermark
  *JOBNAME, USERNAME, and HOSTNAME output of PJL

When using these operating system combinations, install the printer driver on the client with a local connection, and then specify the shared printer installed on the server as the connection.

A tab for specifying printer settings appears in the dialog box.

Common Buttons

The buttons described below appear on each tab.

OK

Click to exit the Properties dialog box, saving any changes made.

Cancel

Click to exit the Properties dialog box without saving any changes made.

Apply

Click to save all changes without exiting the Properties dialog box.

*Depending on the version of the operating system, **Apply** may not appear.*

Restore Defaults

Click this button to reset the settings to their defaults.

Paper Tab

The Paper Tab allows you to

- Specify the size of the original document
- Print several pages of a document on the same page (N-up printing)
- Specify the orientation of the media
- Rotate the print image 180 degrees
- Specify the paper source
- Specify the number of copies
- Specify the desired paper size when a Custom page is selected
- Specify the margins at the top, bottom, left and right
- Specify duplex and booklet printing
- View information about the printer driver

Graphics Tab

The Graphics Tab allows you to

- Specify the resolution for the printout
- Specify the printer color settings
- Select the halftone setting
- Switch between color and monochrome printing
- Print a mirror image
- Scale (expand/reduce) documents

3

Using the Status Monitor (Windows Only)

Working with the Status Monitor

Introduction

The Status Monitor shows information about the current status of the printer.

The Status Monitor can be installed from the Software Utilities CD-ROM.

For details on the installation, refer to the magicolor 5450 Reference Guide on the Documentation CD-ROM.

Operating Environment

The Status Monitor can be used on computers running Windows XP/ Server 2003/2000/Me/98SE/NT 4.0 connected to the printer using either an Ethernet or USB connection.

When Windows NT 4.0 is used, install Windows Media Player (version 6.4 or later).

Opening the Status Monitor

Use one of the following steps to open the Status Monitor:

- **Windows XP/Server 2003**—From the **Start** menu, choose **All Programs**, **KONICA MINOLTA**, and then **Status Monitor**. Double-click the Status Monitor icon displayed in the taskbar.
- **Windows 2000/Me/98SE/NT 4.0**—From the **Start** menu, choose **Programs**, **KONICA MINOLTA**, and then **Status Monitor**. Double-click the Status Monitor icon displayed in the taskbar.

Using the Status Monitor

Status Tab

- **Select Printer**—Selects the printer whose status is displayed. In addition, the messages that appear in the message window of the selected printer are displayed.
- **Graphic**—Shows a graphic representation of the printer and indicates where the problem is. When the background of the printer graphic is red or yellow, there is an error and the job has been interrupted.
- **Advanced Options**—Click **Advanced Options** to display the Advanced Options dialog box. From the Advanced Options dialog box, select whether the Status Monitor automatically starts when the operating system is started and whether error notifications are sent by e-mail.

- **Order Supplies**—Click **Order Supplies** to automatically access the order page for supplies. The address of the page that is accessed can be specified from the Advanced Options dialog box.
- **Printer Alerts**—Displays text messages that alert you of conditions such as low toner.
- **Recovery Instructions**—Provides you with explanations of what you need to do in order to correct problems and recover from error conditions.

Consumables Tab

Displays the usage status (approximate percentage remaining) of each toner consumables.

- **Order Supplies**—Click **Order Supplies** to automatically access the order page for supplies. The address of the page that is accessed can be specified from the Advanced Options dialog box.
- **Refresh**—Rechecks the supplies and displays their status.

*Click **Help** to display windows containing explanations of the Status Monitor functions. Refer to this help for detailed information.*

Recognizing Status Monitor Alerts

When the Status Monitor detects a printing problem, the icon on the Windows task bar changes from green (normal) to yellow (warning), orange or red (error), depending on the severity of the printer problem.

Recovering from a Status Monitor Alert

When the Status Monitor notifies you of a printing problem, double-click its icon on the Windows task bar to open the Status Monitor. The Status Monitor identifies what type of error has occurred.

Closing the Status Monitor

Click **Close** to close the Status Monitor window. To exit Status Monitor, right-click the Status Monitor icon in the taskbar, and then click **Exit**.

4

Printer Control Panel and Configuration Menu

About the Control Panel

The control panel, located on the top of the printer, allows you to direct the printer's operation. In addition, it displays the current status of the printer, including any condition that needs your attention.

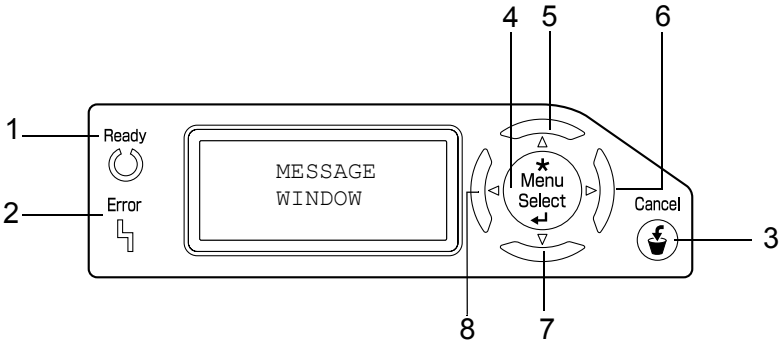

Control Panel Indicators and Keys

No.	Indicator	Off	On
1	Ready	The printer is not ready to accept data.	The printer is ready to accept data.
2	Error	No problem.	The printer requires operator attention (usually accompanied by a status message in the message window.)

No.	Key	Function
3	Cancel	■ Cancels the currently displayed menu or menu choice ■ Allows you to cancel one or all print jobs that are currently being printed or processed: 1. Press the **Cancel** key. 2. Press the **Up** or **Down** keys to select either `CURRENT JOB` or `ALL JOBS`. 3. Press the **Select** key. The print job(s) is (are) cancelled.
4	* Menu Select ↵	■ Enters the menu system ■ Moves down in the menu structure ■ Applies the selected setting ■ MENU appears in the message window
5	△	■ Moves the cursor up ■ Returns to the status screen from the help screen ■ Within a menu choice that is changeable character by character, scrolls upward through the available characters ■ ▲, ▲ appears in the message window
6	▷	■ Moves the cursor to the right ■ Displays the next help screen ■ ▶ appears in the message window
7	▽	■ Moves the cursor down ■ Displays the help screen when an error occurs ■ Within a menu choice that is changeable character by character, scrolls downward through the available characters ■ ▼, ▼ appears in the message window

No.	Key	Function
8	◁	■ Moves the cursor to the left ■ Displays the previous help screen ■ appears in the message window

Message Window

The current status of the printer, the amount of toner remaining, and any error messages can be viewed from the message window.

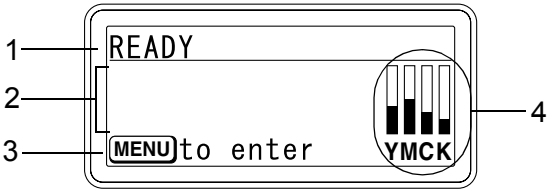

No.	Details
1	The current status of the printer is displayed. ■ If the operator or service representative must be called, the symbol and the error status are displayed. ■ If a warning occurs, the symbol appears. ■ If a print job is being received, the symbol appears on the right side of the window.
2	■ Error messages are displayed. ■ While a print job is being received, the user name and the print progress are displayed. ■ While updating the firmware, the type of firmware being updated and the update progress are displayed.
3	Key information is displayed.
4	The approximate amount of toner remaining is displayed.

Help Screens

The help screens appear when the Down key is pressed after an error occured, such as a media misfeed, so that the error can be corrected.

Configuration Menu Overview

The magicolor 5450 configuration menu accessible from the control panel is structured as shown below.

Main Menu

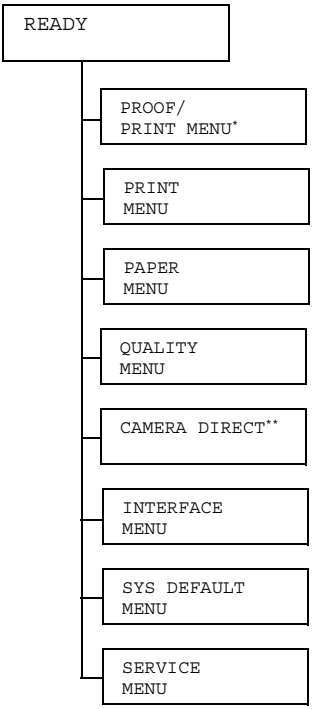

** This menu item appears only if an optional hard disk is installed.*

***This menu item appears when* INTERFACE MENU/CAMERA DIRECT *is set to* ENABLE.

PROOF/PRINT MENU

This menu item appears only if an optional hard disk is installed.

With this menu item, print jobs that were set to be saved on the hard disk by using Job Retention on the Basic tab of the printer driver can be printed or deleted.

All factory default values are shown in bold.

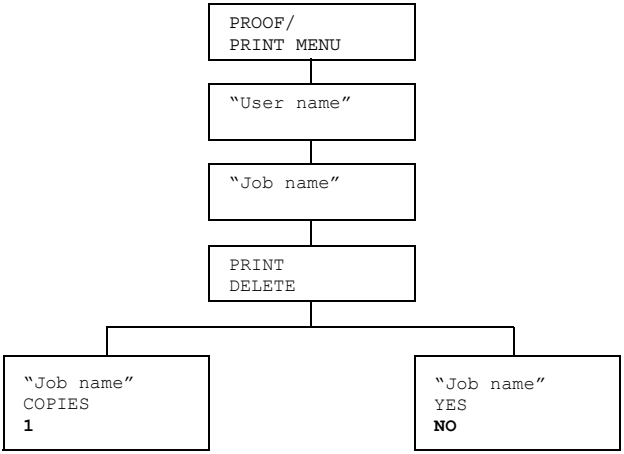

Printing/Deleting a Stored Job

1 Follow the procedure described below to select a job.

Press Key	Until Display Reads
* Menu Select ↵	PROOF/PRINT MENU
* Menu Select ↵	"User name" If no print jobs have been stored on the hard disk, NO STORED JOB appears.

Press Key	Until Display Reads
△, ▽ Press until the desired user name appears.	Desired user name
* Menu Select ↵	"Job name"
△, ▽ Press until the desired job name appears.	Desired job name
* Menu Select ↵	PRINT DELETE If the selected print job was set as a secured job from the printer driver, a screen for entering the password appears. For details on typing the password, refer to "Entering the Password" on page 34.

2 Select PRINT or DELETE, and then press the Menu/Select key.

If PRINT was selected, continue with step 3.
If DELETE was selected, continue with step 5.

3 Press the Up and Down keys to specify the number of copies to be printed. (Settings: 1 to 999; Default: 1)

4 Press the Menu/Select key.

Printing begins.

5 Select YES or NO.

6 Press the Menu/Select key.

If YES was selected, the print job is deleted.
If NO was selected, the PRINT/DELETE selection screen appears again.

Entering the Password

If the print job selected in the PROOF/PRINT MENU is a secured job, a screen for entering the password appears. Follow the procedure described below to type in the four-digit password specified from the printer driver.

1 Press the Up and Down keys to increase or decrease the first digit of the password.

2 Press the Right key to move the cursor to the next digit.

3 Press the Up and Down keys to increase or decrease the second digit of the password.

4 Continue these steps until all four digits of the password are specified.

5 Press the Menu/Select key.

The PRINT/DELETE selection screen appears.

If an incorrect password is entered, INVALID ENTRY appears and the screen for entering the password appears again.

PRINT MENU

With this menu, printer information, such as the configuration page and the demo page, can be printed.

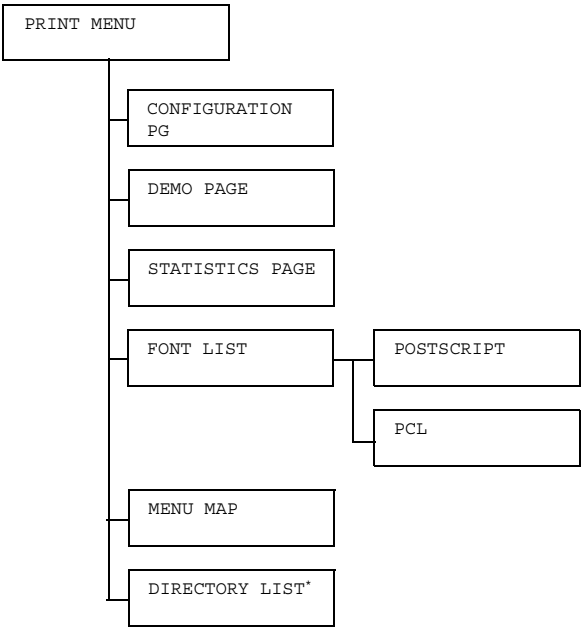

** This menu item appears only if an optional hard disk is installed.*

All factory default values are shown in bold.

CONFIGURATION PG	Settings	**PRINT**/CANCEL
	Prints the configuration page.	
DEMO PAGE	Settings	**PRINT**/CANCEL
	Prints the demo page.	
STATISTICS PAGE	Settings	**PRINT**/CANCEL
	Prints the statistics page such as the number of pages printed.	

FONT LIST	POST SCRIPT	Settings	**PRINT**/CANCEL
		Prints the PostScript font list.	
	PCL	Settings	**PRINT**/CANCEL
		Prints the PCL font list.	
MENU MAP	Settings	**PRINT**/CANCEL	
	Prints the menu map.		
DIRECTORY LIST	Settings	**PRINT**/CANCEL	
	Prints the directory list of the hard disk.		

PAPER MENU

With this menu, the paper used for printing can be managed.

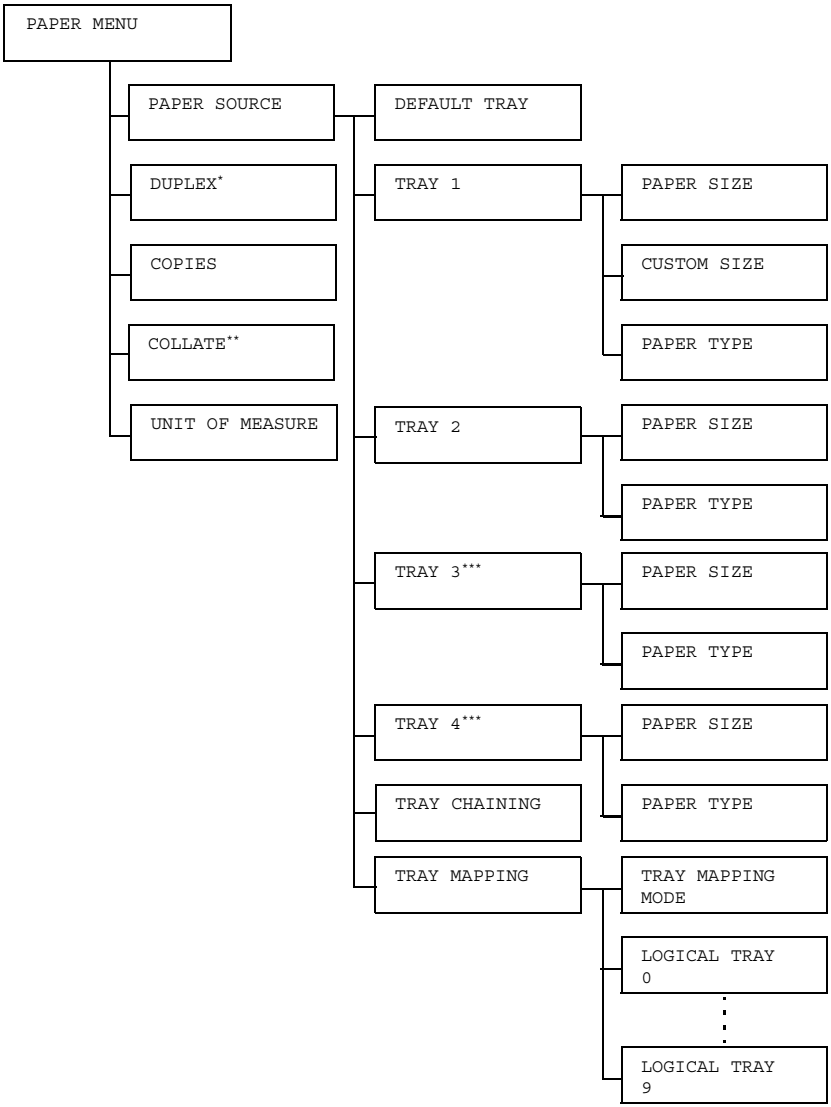

** This menu item appears only if the optional duplex unit is installed.*
*** This menu item appears only if an optional hard disk is installed.*
**** These menu items appear only if one or both of the optional lower feeder units are installed.*

All factory default values are shown in bold.

PAPER SOURCE	DEFAULT TRAY	Settings		TRAY 1/**TRAY 2**/ TRAY 3/TRAY 4
		The paper tray that is normally used can be specified. *TRAY 3 and TRAY 4 appear only if the optional lower feeder units are installed.*		
	TRAY 1	PAPER SIZE	Settings	ANY/**LETTER**/LEGAL/ EXECTIVE/**A4**/A5/ B5(JIS)/GOVT LETTER/ STATEMENT/FOLIO/SP FOLIO/UK QUARTO/ FOOLSCAP/GOVT LEGAL/ 16K/KAI 16/KAI 32/ ENV C5/ENV C6/ENV DL/ENV MONARCH/ENV CHOU#3/ENV CHOU#4/ B5(ISO)/ENV #10/ENV YOU#4/JPOST/JPOST-D/ CUSTOM
			Select the setting for the size of paper loaded into Tray 1. *The default setting for North America is LETTER. The default setting for all other regions is A4.*	

		CUSTOM SIZE	Specify the paper size when custom-sized paper is loaded into Tray 1. The setting units can be switched between millimeters and inches with the UNIT OF MEASURE setting. Setting range for WIDTH ■ For MILLIMETERS: 92 to 216 mm (The default is 210.) ■ For INCHES: 3.63 to 8.50 in. (The default is 8.50.) Setting range for LENGTH ■ For MILLIMETERS: 148 to 356 mm (The default is 297.) ■ For INCHES: 5.83 to 14.00 (The default is 11.00.) *This menu item appears only if PAPER SIZE is set to CUSTOM.*	
		PAPER TYPE	Settings	ANY/**PLAIN PAPER**/ RECYCLED/THICK 1/ THICK 2/LABEL/ TRANSPARENCY/ ENVELOPE/POSTCARD/ LETTERHEAD/GLOSSY
			Select the setting for the type of paper loaded into Tray 1.	
	TRAY 2	PAPER SIZE	Settings	**LETTER**/**A4**
			Select the setting for the size of paper loaded into Tray 2. *The default setting for North America is LETTER. The default setting for all other regions is A4.*	
		PAPER TYPE	Settings	ANY/**PLAIN PAPER**/ RECYCLED
			Select the setting for the type of paper loaded into Tray 2.	

	TRAY 3 TRAY 4	PAPER SIZE	The size of paper loaded in Tray 3 and Tray 4 is indicated. This menu item only shows the current setting. This setting cannot be changed.	
		PAPER TYPE	Settings	ANY/**PLAIN PAPER**/ RECYCLED
			Select the setting for the type of paper loaded into Tray 3/Tray 4.	
	TRAY CHAINING	Settings	**ON**/OFF	
		If ON is selected and the specified paper tray runs out of paper during printing, a paper tray loaded with paper of the same size is automatically selected so printing can continue. If OFF is selected and the specified paper tray runs out of paper, printing stops.		
	TRAY MAPPING	TRAY MAPPING MODE	Settings	ON/**OFF**
			Select whether or not the Tray Mapping function is used.	
		LOGICAL TRAY 0-9	Settings	PHYSICAL TRAY1/ PHYSICAL TRAY2/ PHYSICAL TRAY3/ PHYSICAL TRAY4
			Select the tray that is used for printing when a print job is received from another manufacturer's printer driver. The default setting for LOGICAL TRAY 1 is PHYSICAL TRAY1. The default setting for all other trays is PHYSICAL TRAY2. PHYSICAL TRAY3 *and* PHYSICAL TRAY4 *appear only if an optional lower feeder unit is installed.*	

DUPLEX	Settings	**OFF**/LONG EDGE/SHORT EDGE
	If OFF is selected, duplex printing is not possible. If LONG EDGE is selected, the pages will be printed on both sides of the paper for long-edge binding. If SHORT EDGE is selected, the pages will be printed on both sides of the paper for short-edge binding. The setting specified in the printer driver will override this menu setting.	
COPIES	Settings	**1**–9999
	Specify the number of copies to be printed. The setting specified in the printer driver will override this menu setting.	
COLLATE	Settings	ON/**OFF**
	If ON is selected, all pages of the document are printed before the next copy is printed. If OFF is selected, all copies of the document are not printed separately. The setting specified in the printer driver will override this menu setting.	
UNIT OF MEA-SURE	Settings	**INCHES**/**MILLIMETERS**
	The units for specifying the size of custom paper can be switched between inches and millimeters. *The default setting for North America is INCHES. The default setting for all other regions is MILLIMETERS.*	

QUALITY MENU

With this menu, settings for the print quality can be specified.

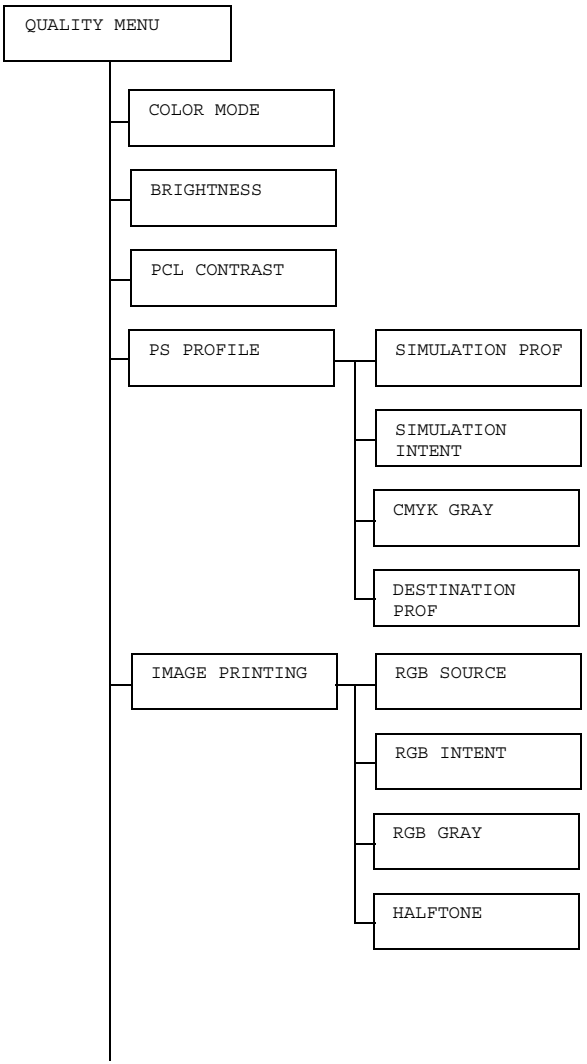

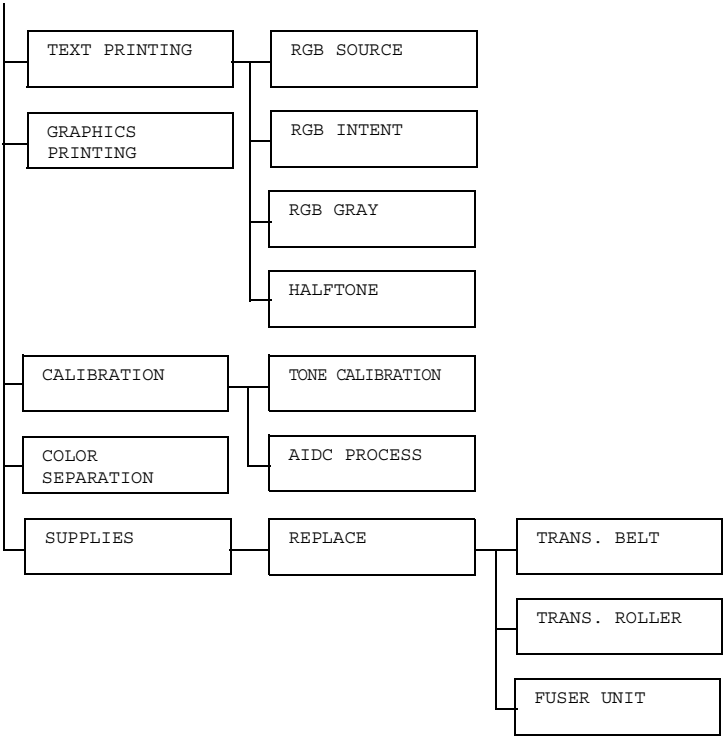

All factory default values are shown in bold.

COLOR MODE	Settings	**COLOR**/GRAYSCALE
	If COLOR is selected, the pages are printed in full color. If GRAYSCALE is selected, the pages are printed in black and white.	
BRIGHT-NESS	Settings	-15%/-10%/-5%/**0%**/+5%/+10%/+15%
	The brightness of the printed image can be adjusted.	
PCL CONTRAST	Settings	-15%/-10%/-5%/**0%**/+5%/+10%/+15%
	The contrast of the image can be adjusted.	

PS PROFILE	SIMULATION PROF	Settings	**NONE**/SWOP/Euroscale/ CommercialPress/ TOYO/DIC
		Specify the simulation profile. If NONE is selected, no simulation profile is specified. If simulation profiles are downloaded with the Download Manager, they are available from the list of settings.	
	SIMULATION INTENT	Settings	**RELATIVE COLOR**/ ABSOLUTE COLOR
		Specify the characteristic of the simulation profile. If RELATIVE COLOR is selected, relative color is applied to the simulation profile. If ABSOLUTE COLOR is selected, absolute color is applied to the simulation profile.	
	CMYK GRAY	Settings	**COMPOSITE BLACK**/ BLACK AND GRAY/BLACK ONLY
		Specify how black and grays are reproduced using the four CMYK colors. If COMPOSITE BLACK is selected, black is reproduced using the CMYK colors. If BLACK AND GRAY is selected, black and gray are reproduced using black only. If BLACK ONLY is selected, black is reproduced using only black.	

	DESTINATION PROF	Settings	**AUTO**
		Specify the destination profile. If AUTO is selected, a destination profile that the printer automatically adapts is selected based on a combination of the specified color matching, halftones and other profiles. If destination profiles are downloaded with the Download Manager, they are available from the list of settings.	
IMAGE PRINTING	RGB SOURCE	Settings	DEVICE COLOR/**sRGB**/ AppleRGB/ AdobeRGB1998/ ColorMatchRGB/ BlueAdjustRGB
		Specify the color space for RGB image data. If DEVICE COLOR is selected, no color space is specified. If RGB source profiles are downloaded with the Download Manager, they are available from the list of settings.	
	RGB INTENT	Settings	VIVID/**PHOTOGRAPHIC**/ RELATIVE COLOR/ ABSOLUTE COLOR
		Specify the characteristic when converting RGB image data to CMYK data. If VIVID is selected, a vivid output is produced. If PHOTOGRAPHIC is selected, a brighter output is produced. If RELATIVE COLOR is selected, relative color is applied to the RGB source profile. If ABSOLUTE COLOR is selected, absolute color is applied to the RGB source profile.	

	RGB GRAY	Settings	**COMPOSITE BLACK**/ BLACK AND GRAY/ BLACK ONLY
		Specify how black and grays are reproduced in RGB image data. If COMPOSITE BLACK is selected, black is reproduced using the CMYK colors. If BLACK AND GRAY is selected, black and gray are reproduced using black only. If BLACK ONLY is selected, black is reproduced using only black.	
	HALFTONE	Settings	LINE ART/**DETAIL**/ SMOOTH
		Select how halftones are reproduced. If LINE ART is selected, halftones are reproduced with high precision. If DETAIL is selected, halftones are reproduced with detail. If SMOOTH is selected, halftones are reproduced with smoothness.	
TEXT PRINTING	RGB SOURCE	Settings	DEVICE COLOR/**sRGB**/ AppleRGB/ AdobeRGB1998/ ColorMatchRGB/ BlueAdjustRGB
		Specify the color space for RGB text data. If DEVICE COLOR is selected, no color space is specified. If RGB source profiles are downloaded with the Download Manager, they are available from the list of settings.	

	RGB INTENT	Settings	**VIVID**/PHOTOGRAPHIC/ RELATIVE COLOR/ ABSOLUTE COLOR
		Specify the characteristic when converting RGB text data to CMYK data. If VIVID is selected, a vivid output is produced. If PHOTOGRAPHIC is selected, a brighter output is produced. If RELATIVE COLOR is selected, relative color is applied to the RGB source profile. If ABSOLUTE COLOR is selected, absolute color is applied to the RGB source profile.	
	RGB GRAY	Settings	COMPOSITE BLACK/ **BLACK AND GRAY**/BLACK ONLY
		Specify how black and grays are reproduced in RGB text data. If COMPOSITE BLACK is selected, black is reproduced using the CMYK colors. If BLACK AND GRAY is selected, black and gray are reproduced using black only. If BLACK ONLY is selected, black is reproduced using only black.	
	HALFTONE	Settings	**LINE ART**/DETAIL/ SMOOTH
		Select how halftones are reproduced. If LINE ART is selected, halftones are reproduced with high precision. If DETAIL is selected, halftones are reproduced with detail. If SMOOTH is selected, halftones are reproduced with smoothness.	

GRAPHICS PRINTING	Settings		**AS IMAGE**/AS TEXT	
	Specify the color setting for graphics. If AS IMAGE is selected, the color setting that is the same as the image is applied. If AS TEXT is selected, the color setting that is the same as the text is applied.			
CALIBRATION	TONE CALIBRATION	Settings	**ON**/OFF	
		If ON is selected, image adjustments are applied. If OFF is selected, image adjustments are not applied.		
	AIDC PROCESS	Settings	EXECUTE/**CANCEL**	
		If EXECUTE is selected, image adjustments are performed immediately. If CANCEL is selected, image adjustments are not performed.		
COLOR SEPARATION	Settings	ON/**OFF**		
	If ON is selected, color separation is performed. If OFF is selected, color separation is not performed.			
SUPPLIES	REPLACE	TRANS. BELT	Settings	YES/**NO**
			If YES is selected, the service life counter for the transfer belt is reset.	
		TRANS. ROLLER	Settings	YES/**NO**
			If YES is selected, the service life counter for the transfer roller is reset.	
		FUSER UNIT	Settings	YES/**NO**
			If YES is selected, the service life counter for the fuser unit is reset.	

CAMERA DIRECT MENU

This menu item appears when INTERFACE MENU/CAMERA DIRECT is set to ENABLE.

With this menu, settings for “camera direct” function can be specified.

These settings are overridden by any settings configured within the digital camera.
For details on camera direct, refer to “Camera Direct” on page 64.

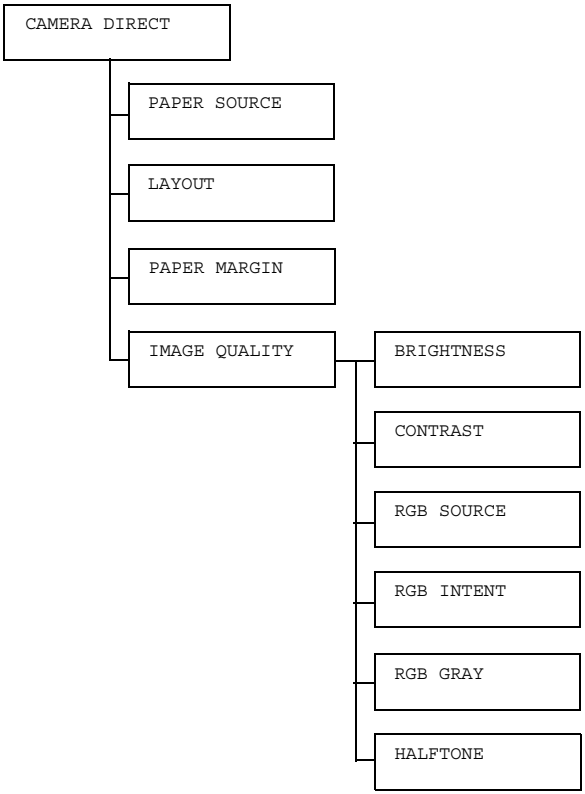

All factory default values are shown in bold.

PAPER SOURCE	Settings	TRAY1/**TRAY2**/TRAY3/TRAY4	
	Select the tray that is used for camera direct printing. *TRAY3 and TRAY4 appear only if the optional lower feeder units are installed.*		
LAYOUT	Settings	**1-UP**/2-UP/3-UP/4-UP/6-UP/8-UP	
	Specify the number of images printed on a single sheet of media. When set to 1-UP, only one image will be printed on a single sheet of media.		
PAPER MARGIN	Settings	**STANDARD**/MINIMUM	
	Select the size of the media margins (area that is not printed in). If STANDARD is selected, the standard media margin size is specified. If MINIMUM is selected, the media margins are reduced.		
IMAGE QUAL-ITY	BRIGHT-NESS	Settings	-15%/-10%/-5%/**0%**/+5%/+10%/+15%
		The brightness of the printed image can be adjusted.	
	CONTRAST	Settings	-15%/-10%/-5%/**0%**/+5%/+10%/+15%
		The contrast of the image can be adjusted.	
	RGB SOURCE	Settings	DEVICE COLOR/**sRGB**
		Specify the color space for RGB image data. If DEVICE COLOR is selected, the device profile of this printer is used.	
	RGB INTENT	Settings	VIVID/**PHOTOGRAPHIC**
		Specify the characteristic applied when converting RGB image data to CMYK data. If VIVID is selected, a vivid output is produced. If PHOTOGRAPHIC is selected, a brighter output is produced.	

	RGB GRAY	Settings	**COMPOSITE BLACK**/BLACK AND GRAY/BLACK ONLY
		Specify how black and grays are reproduced in RGB image data. If COMPOSITE BLACK is selected, black is reproduced using the CMYK colors. If BLACK AND GRAY is selected, black and gray are reproduced using black only. If BLACK ONLY is selected, black is reproduced using only black.	
	HALFTONE	Settings	LINE ART/**DETAIL**/SMOOTH
		Select how halftones are reproduced. If LINE ART is selected, halftones are reproduced with high precision. If DETAIL is selected, halftones are reproduced with detail. If SMOOTH is selected, halftones are reproduced with smoothness.	

INTERFACE MENU

With this menu, interface settings can be specified.

Restart the printer after changing settings in the ETHERNET menu.

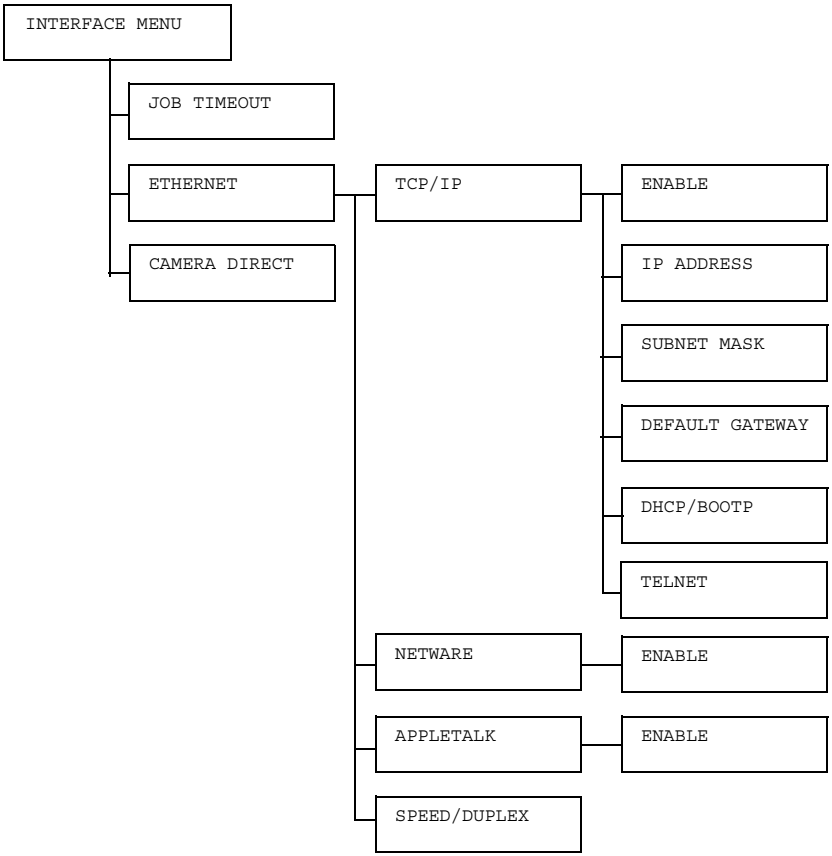

All factory default values are shown in bold.

JOB TIME-OUT	Settings	5 seconds-**15 seconds**-300 seconds		
	Specify the timeout interval for a print job being received.			
ETHER-NET	TCP/IP	ENABLE	Settings	**YES**/NO
			If YES is selected, TCP/IP is enabled. If NO is selected, TCP/IP is disabled.	
		IP ADDRESS	Setting	**000.000.000.000**
			Set the IP address for this printer on the network. Use the Up, Down, Left, and Right keys to specify the value. If the IP address is manually specified, DHCP/BOOTP is automatically set to OFF.	
		SUBNET MASK	Setting	**255.255.000.000**
			Specify the subnet mask for the network. Use the Up, Down, Left, and Right keys to specify the value.	
		DEFAULT GATEWAY	Setting	**000.000.000.000**
			Specify the IP address of the router if one is on the network. Use the Up, Down, Left, and Right keys to specify the value.	
		DHCP/ BOOTP	Settings	**ON**/OFF
			Select whether or not the IP address is automatically acquired. If ON is selected, the IP address is automatically acquired. If OFF is selected, the IP address is not automatically acquired.	

		TELNET	Settings	**ENABLE**/DISABLE
			Select whether to enable or disable Telnet transmissions. When ENABLE is selected, Telnet transmissions are enabled. When DISABLE is selected, Telnet transmissions are disabled.	
	NETWARE	ENABLE	Settings	**YES**/NO
			If YES is selected, NetWare is enabled. If NO is selected, NetWare is disabled.	
	APPLE TALK	ENABLE	Settings	**YES**/NO
			If YES is selected, AppleTalk is enabled. If NO is selected, AppleTalk is disabled.	
	SPEED/ DUPLEX	Settings	**AUTO**/10BASE FULL/10BASE HALF/100BASE FULL/100BASE HALF/1000BASE FULL	
		Specify the transmission speed for the network and the transmission method for bi-directional transmission.		
CAMERA DIRECT	Settings	**ENABLE**/DISABLE		
	Select whether to enable or disable camera direct printing. If ENABLE is selected, camera direct printing is enabled. If DISABLE is selected, camera direct printing is disabled.			

SYS DEFAULT MENU

With this menu, settings can be specified to adjust the operation of the printer, such as the display language of the message window and the time until the machine enters Energy Saver mode.

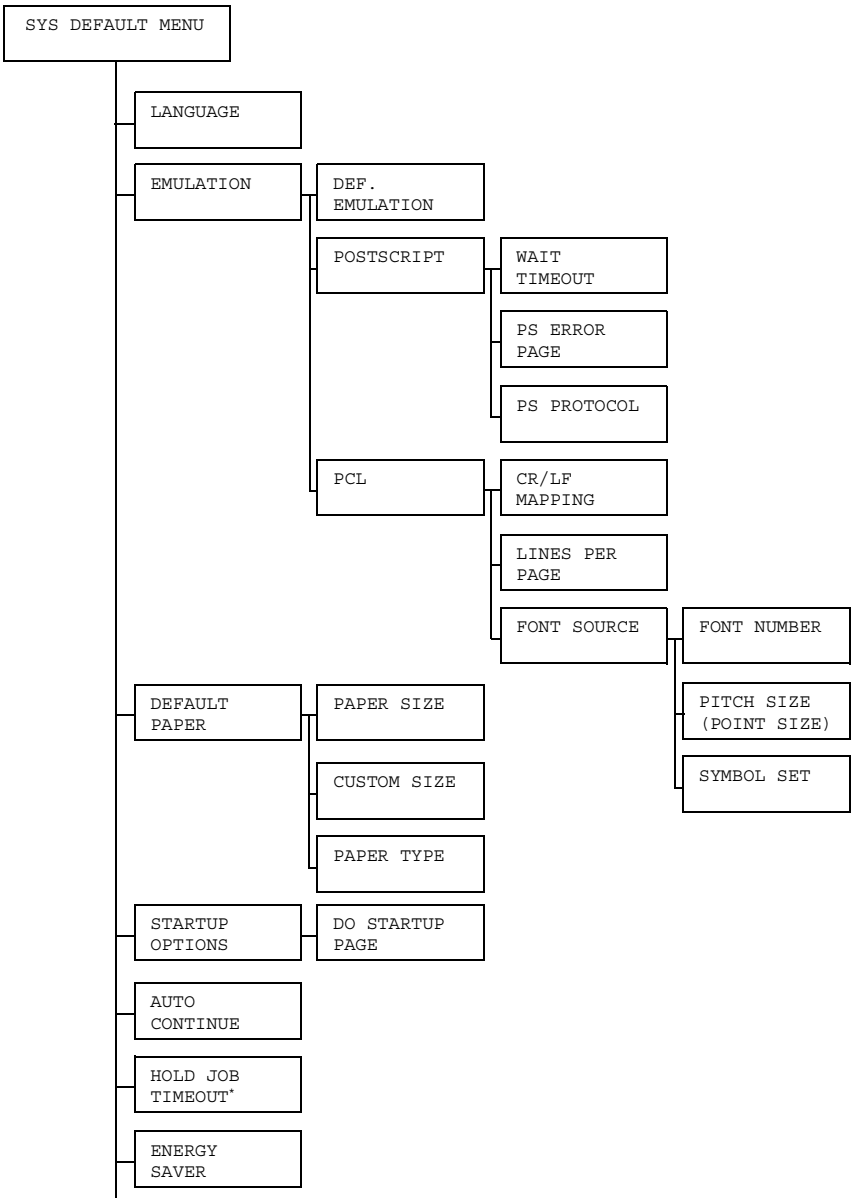

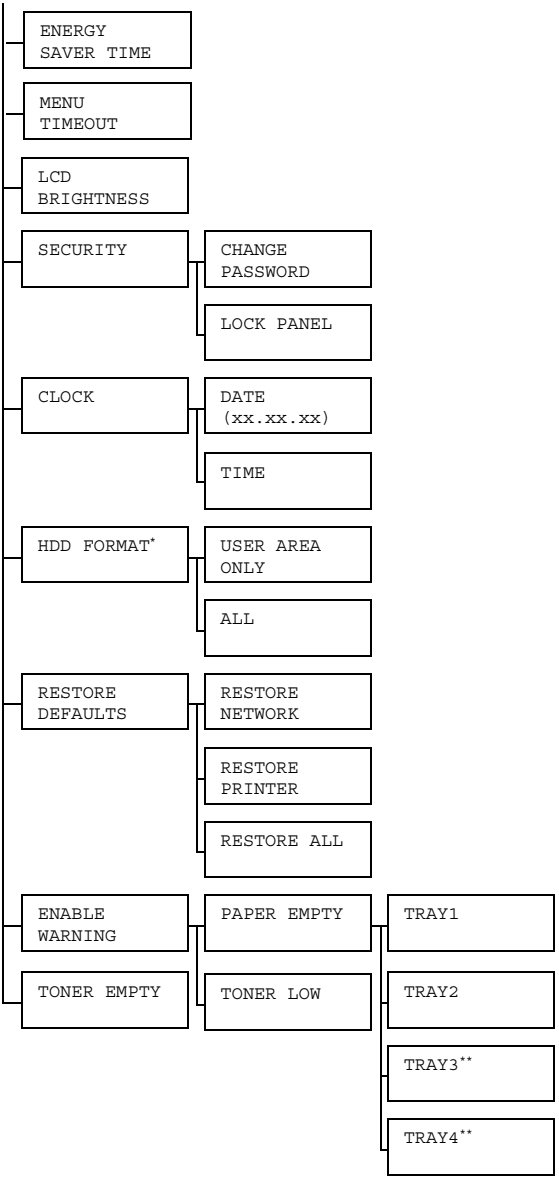

*** These menu items appear only if an optional hard disk is selected.*
**** These menu items appear only if one or both of the optional lower feeder units are installed.*

All factory default values are shown in bold.

LAN-GUAGE	Settings	**ENGLISH**/FRENCH/GERMAN/SPANISH/ITALIAN/PORTUGUESE/CZECH/JAPANESE/KOREAN/SIMPLIFIED CHINESE/TRADITIONAL CHINESE/DUTCH		
	The display language of the message window can be changed to the selected language. The language selections appear in the message window in the corresponding language, for example, GERMAN appears as DEUTSCH.			
EMULA-TION	DEF. EMULA-TION	Settings	**AUTO**/POSTSCRIPT/PCL	
		Specify the printer emulation language. If AUTO is selected, the printer automatically selects the printer emulation language from the data stream.		
	POST-SCRIPT	WAIT TIME OUT	Settings	**0**-300
			Specify the time until an error is determined to be a PostScript error. If 0 is selected, no timeout is performed.	
		PS ERROR PAGE	Settings	ON/**OFF**
			Select whether or not an error page is printed when a Postscript error occurs.	
		PS PROTO-COL	Settings	**AUTO**/NORMAL/BINARY
			Specify the protocol for data transmissions with a PostScript data stream. If AUTO is selected, the printer automatically selects an applicable protocol from the data stream.	

	PCL	CR/LF MAP-PING	Settings	**CR=CR LF=LF**/CR=CRLF LF=LF/CR=CR LF=LFCR/CR=CRLF LF=LFCR	
			Select the definitions of the CR/LF codes in the PCL language.		
		LINES PER PAGE	Settings	5-**60**-128	
			Specify the number of lines per page in the PCL language.		
		FONT SOURCE	FONT NUMBER	Settings	**0**-102
				Specify the default font in the PCL language. The font numbers that appear correspond to the PCL font list. For details on printing the font list, refer to “PRINT MENU” on page 35.	
			PITCH SIZE (POINT SIZE)	Settings	0.44-**10.00**-99.99 (4.00-**12.00**-999.75)
				Specify the font size in the PCL language. If the selected FONT NUMBER is for a bitmap font, PITCH SIZE appears. If the selected FONT NUMBER is for an outline font, POINT SIZE appears.	
			SYMBOL SET	Specify the symbol set used with the PCL language. The default setting is PC8.	

DEFAULT PAPER	PAPER SIZE	Settings	**LETTER**/LEGAL/EXECTIVE/**A4**/ A5/B5(JIS)/GOVT LETTER/ STATEMENT/FOLIO/SP FOLIO/UK QUARTO/FOOLSCAP/GOVT LEGAL/ 16K/KAI 16/KAI 32/ENV C5/ ENV C6/ENV DL/ENV MONARCH/ ENV CHOU#3/ENV CHOU#4/ B5(ISO)/ENV #10/ENV YOU#4/ JPOST/JPOST-D/CUSTOM
		Select the size of paper that is normally used. *The default setting for North America is LETTER. The default setting for all other regions is A4.*	
	CUSTOM SIZE	Specify the paper size when PAPER SIZE is set to CUSTOM. The setting units can be switched between millimeters and inches with the UNIT OF MEASURE setting. Setting range for WIDTH ■ For MILLIMETERS: 92 to 216 mm (The default is 210.) ■ For INCHES: 3.63 to 8.50 in. (The default is 8.50.) Setting range for LENGTH ■ For MILLIMETERS: 148 to 356 mm (The default is 297.) ■ For INCHES: 5.83 to 14.00 (The default is 11.00.)	
	PAPER TYPE	Settings	**PLAIN PAPER**/RECYCLED/THICK 1/THICK 2/LABEL/ TRANSPARENCY/ ENVELOPE/POSTCARD/ LETTERHEAD/GLOSSY
		Select the type of paper that is normally used.	

STARTUP OPTIONS	DO STARTUP PAGE	Settings	ON/**OFF**
		Select whether or not a startup page is printed when the printer is turned on.	
AUTO CON-TINUE	Settings	ON/**OFF**	
	Select whether or not printing continues if the size or type of paper in the selected paper tray is different from the size or type of paper for the print job.		
HOLD JOB TIME OUT	Settings	**DISABLE**/1 hour/4 hours/1 day/ 1 week	
	Specify the length of time until print jobs saved on the hard disk are deleted. If DISABLE is selected, print jobs are not deleted at a specific time.		
ENERGY SAVER	Settings	**ON**/OFF	
	If ON is selected, the machine will enter Energy Saver mode. If OFF is selected, the machine will not enter Energy Saver mode.		
ENERGY SAVER TIME	Settings	5 minutes/15 minutes/**30 minutes**/1 hour/3 hours	
	Specify the length of time until the machine enters Energy Saver mode. This menu item appears only when ENERGY SAVER is set to ON.		
MENU TIME OUT	Settings	OFF/1 minute/**2 minutes**	
	Specify the length of time until the status screen is displayed when no operation is performed while a menu or help screen is displayed in the message window. If OFF is selected, no timeout occurs.		
LCD BRIGHT NESS	Settings	-3/-2/-1/**0**/+1/+2/+3	
	Adjust the brightness of the message window. The darkest level setting is -3 and the brightest level setting is +3.		

SECU-RITY	CHANGE PASSWORD	Specify the password for locking the control panel. If the password is set to 0000 (default), the control panel is not locked. In order to lock the control panel, be sure to specify a password other than 0000.
	LOCK PANEL	Settings **OFF**/MINIMUM/ON
		Specify how the control panel is locked. If OFF is selected, the control panel is not locked. If MINIMUM is selected, the INTERFACE MENU and SYS DEFAULT MENU are protected with a password. If ON is selected, all menus are protected with a password. In order to lock the control panel, be sure to specify a password other than 0000.
CLOCK	DATE(xx.xx.xx)	Specify the date for the printer's internal clock. The date for the Americas is set in the order month, day, then year (MM.DD.YY). The date for all other regions is set in the order day, month, then year (DD.MM.YY).
	TIME	Specify the time for the printer's internal clock.
HDD FORMAT	USER AREA ONLY	Initialize the user area of the hard disk. When this menu item is selected, the printer is automatically restarted.
	ALL	Initialize the hard disk. When this menu item is selected, the printer is automatically restarted.
RESTORE DEFAULTS	RESTORE NETWORK	Reset the network settings to their defaults. When this menu item is selected, the printer is automatically restarted.
	RESTORE PRINTER	Reset the printer settings to their defaults. When this menu item is selected, the printer is automatically restarted.
	RESTORE ALL	Reset all settings to their defaults. When this menu item is selected, the printer is automatically restarted.

ENABLE WARNING	PAPER EMPTY	TRAY1	Settings	ON/**OFF**
			Select whether or not a warning appears when Tray 1 runs out of paper.	
		TRAY2	Settings	**ON**/OFF
			Select whether or not a warning appears when Tray 2 runs out of paper.	
		TRAY3	Settings	**ON**/OFF
			Select whether or not a warning appears when Tray 3 runs out of paper.	
		TRAY4	Settings	**ON**/OFF
			Select whether or not a warning appears when Tray 4 runs out of paper.	
	TONER LOW	Settings	**ON**/OFF	
		Select whether or not a warning appears when the toner is about to run out.		
TONER EMPTY	Settings	**STOP**/CONTINUE		
	If STOP is selected, printing stops when the toner runs out. If CONTINUE is selected, printing continues if toner runs out.			

SERVICE MENU

With this menu, the service representative can adjust the printer and perform maintenance operations. This menu cannot be used by the user.

5

Camera Direct

Camera Direct

If a digital camera with PictBridge (1.0 or later) is connected to the printer through the Camera Direct Print port, images stored on the digital camera can be printed directly from the printer.

For details on using the digital camera, refer to your digital cameras manual.

The following features are not supported with Camera Direct.
- DPOF AUTOPRINT image print
- Cropping print
- Borderless
- Print quality (printer setup)
- Paper type (printer setup)
- DPOF cable disconnect recovery

Printing Directly from a Digital Camera

1 From the printer's `Camera Direct` Menu, specify settings for `Paper Source`, `Layout`, `Paper Margin` and `Image Quality`.

The Media Type setting that is used is the default printer setting that is selected.
The Media Type setting cannot be selected from the digital camera.

If these settings can be specified from the digital camera, they do not need to be specified from the control panel. These settings are overridden by settings configured within the digital camera.
For details on control panel settings, refer to "CAMERA DIRECT MENU" on page 49.

2 Connect the USB cable to the digital camera and to the camera direct port.

A USB cable is not included with the printer and must be purchased separatelly, if not supplied with your digital camera.

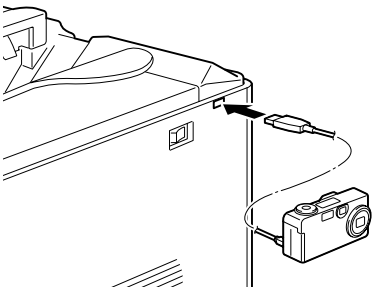

3 From the digital camera, specify the image that you wish to print and the desired number of copies.

4 Start printing from the digital camera.

6

Using Media

Media Specifications

What types and sizes of media can I load?

Media	Media Size		Tray*	Duplex
	Inch	Millimeter		
A4	8.2 x 11.7	210.0 x 297.0	1/2/3/4	Yes
A5	5.9 x 8.3	148.0 x 210.0	1	No
B5 (JIS)	7.2 x 10.1	182.0 x 257.0	1/3/4	Yes
B5 (ISO)	6.9 x 9.8	176.0 x 250.0	1	No
Executive	7.25 x 10.5	184.0 x 267.0	1/3/4	Yes
Folio	8.3 x 13.0	210.0 x 330.0	1	Yes
Foolscap	8.0 x 13.0	203.2 x 330.2	1	Yes
Kai 16	7.3 x 10.2	185.0 x 260.0	1	Yes
Kai 32	5.1 x 7.3	130.0 x 185.0	1	No
16 K	7.7 x 10.6	195.0 x 270.0	1	Yes
Legal	8.5 x 14.0	215.9 x 355.6	1/3/4	Yes
Government Legal	8.5 x 13.0	216.0 x 330.0	1/3/4	Yes
Letter	8.5 x 11.0	215.9 x 279.4	1/2/3/4	Yes
SP Folio	8.5 x 12.7	215.9 x 322.3	1	Yes
Government Letter	8.0 x 10.5	203.2 x 266.7	1	Yes
Statement	5.5 x 8.5	140.0 x 216.0	1	No
UK Quarto	8.0 x 10.0	203.2 x 254.0	1	No
Japanese Postcard	3.9 x 5.8	100.0 x 148.0	1	No
Japanese Postcard-D	5.8 x 7.9	148.0 x 200.0	1	No
Envelope C5	6.4 x 9.0	162.0 x 229.0	1	No
Envelope C6	4.5 x 6.4	114.0 x 162.0	1	No
Envelope Com10	4.125 x 9.5	104.7 x 241.3	1	No
Envelope DL	4.3 x 8.7	110.0 x 220.0	1	No
Envelope Monarch	3.875 x 7.5	98.4 x 190.5	1	No
Envelope Chou #3	4.7 x 9.2	120.0 x 235.0	1	No
Envelope Chou #4	3.5 x 8.1	90.0 x 205.0	1	No
Envelope You #4	4.1 x 9.3	105.0 x 235.0	1	No
Thick 1, 2, Glossy —Only supported for letter, A4, or smaller media.				
Custom, Minimum	3.6 x 5.9	92.0 x 148.0	1	No**
Custom, Maximum	8.5 x 14.0	216.0 x 355.6	1	Yes

Notes: * Tray 1= Manual feed tray
Tray 3/4 = Lower feeder units (optional)
** The minimum possible size for duplex printing is B5 (JIS).

For custom sizes, use the printer driver to specify the settings within the ranges shown in the above table.

Media Types

Before purchasing a large quantity of special media, do a trial print with the same media and check the print quality.

Keep media on a flat, level surface in its original wrapper until it is time to load it. For a list of approved media, refer to printer.konicaminolta.com.

Plain Paper (Recycled Paper)

Capacity	**Tray 1 (Manual Feed Tray)**	Up to 100 sheets, depending on the paper weight.
	Tray 2/3/4	Up to 500 sheets, depending on the paper weight.
Orientation	**Tray 1 (Manual Feed Tray)**	Face down
	Tray 2/3/4	Face up
Driver Media Type	Plain Paper (Recycled)	
Weight	60–90 g/m² (16–24 lb bond)	
Duplexing	See page 66 for supported sizes.	

Use media that is

Suitable for plain paper laser printers, such as standard or recycled office paper.

Note

Do not use the media types listed below. These could cause poor print quality, media misfeeds, or damage to the printer.

DO NOT use media that is

- Coated with a processed surface (such as carbon paper, and colored paper that has been treated)
- Carbon backed
- Unapproved iron-on transfer media (such as heat-sensitive paper, heat-pressure paper, and heat-press transfer paper)
- Cold-water-transfer paper
- Pressure sensitive
- Designed specifically for inkjet printers (such as superfine paper, glossy paper, glossy film, and postcards)

- Paper that has already been printed on
  - Paper that has been printed on with an inkjet printer
  - Paper that has been printed on with a monochrome/color laser printer/ copier
  - Paper that has been printed on with a heat-transfer printer
  - Paper that has been printed on with any other printer or fax machine
- Dusty
- Wet (or damp)

  Keep media between 35% and 85% relative humidity. Toner does not adhere well to moist or wet paper.
- Layered
- Adhesive
- Folded, creased, curled, embossed, warped, or wrinkled
- Perforated, three-hole punched, or torn
- Too slick, too coarse, or too textured
- Different in texture (roughness) on the front and back
- Too thin or too thick
- Stuck together with static electricity
- Composed of foil or gilt; too luminous
- Heat sensitive or cannot withstand the fusing temperature (180°C [356°F])
- Irregularly shaped (not rectangular or not cut at right angles)
- Attached with glue, tape, paper clips, staples, ribbons, hooks, or buttons
- Acidic
- Any other media that is not approved

Thick Stock

Paper thicker than 90 g/m^2 (24 lb bond) is referred to as thick stock. Test all thick stock to ensure acceptable performance and to ensure that the image does not shift.

Capacity	**Tray 1 (Manual Feed Tray)**	Up to 20 thick stock sheets, depending on their thickness.
	Tray 2/3/4	Not supported
Orientation	Face down	

Driver Media Type	Thick 1 (91-150 g/m^2) Thick 2 (151-210 g/m^2)
Weight	91–210 g/m² (25–55.9 lb bond)
Duplexing	Not supported

DO NOT use thick stock that is

- Mixed with any other media in Tray 1 (as this will cause printer misfeeding)

Envelopes

Print on the front (address) side only. Some parts of the envelope consist of three layers of paper—the front, back, and flap. Anything printed in these layered regions may be lost or faded.

Capacity	**Tray 1 (Manual Feed Tray)**	Up to 10 envelopes, depending on their thickness
	Tray 2/3/4	Not supported
Orientation	Face down	
Driver Media Type	Envelope	
Weight	91–163 g/m² (25–43 lb bond)	
Duplexing	Not supported	

Use envelopes that are

- Common office envelopes approved for laser printing with diagonal joints, sharp folds and edges, and ordinary gummed flaps

  Because the envelopes pass through heated rollers, the gummed area on the flaps may seal. Using envelopes with emulsion-based glue avoids this problem.

- Approved for laser printing
- Dry

DO NOT use envelopes that have

- Sticky flaps
- Tape seals, metal clasps, paper clips, fasteners, or peel-off strips for sealing
- Transparent windows
- Too rough of a surface

- Material that will melt, vaporize, offset, discolor, or emit dangerous fumes
- Been presealed

Labels

A sheet of labels consists of a face sheet (the printing surface), adhesive, and a carrier sheet:

- The face sheet must follow the plain paper specification.
- The face sheet surface must cover the entire carrier sheet, and no adhesive should come through on the surface.

You can print continuously with label sheets. However, this could affect the media feed, depending on the media quality and printing environment. If problems occur, stop the continuous printing and print one sheet at a time.

Try printing your data on a sheet of plain paper first to check placement. Check your application documentation for more information on printing labels.

Capacity	**Tray 1 (Manual Feed Tray)**	Up to 20 label sheets, depending on their thickness
	Tray 2/3/4	Not supported
Orientation	Face down	
Driver Media Type	Label	
Weight	60–163 g/m² (16–43 lb bond)	
Duplexing	Not supported	

Use label sheets that are

- Recommended for laser printers
- Letter or A4 size (adhesive label stock)

DO NOT use label sheets that

- Have labels that easily peel off or have parts of the label already removed
- Have backing sheets that have peeled away or have exposed adhesive

Labels may stick to the fuser, causing them to peel off and media misfeeds to occur.

- Are precut or perforated

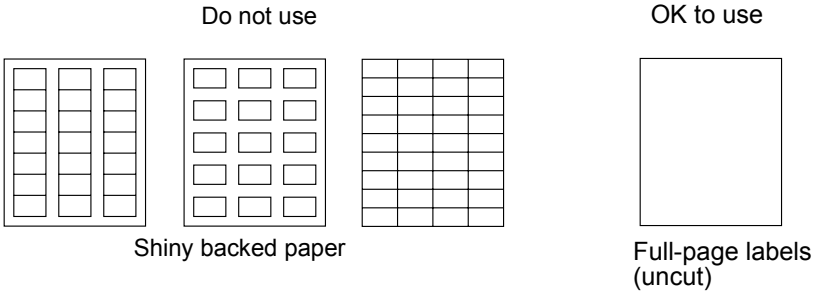

Letterhead

Try printing your data on a sheet of plain paper first to check placement.

Capacity	**Tray 1 (Manual Feed Tray)**	Up to 20 sheets, depending on their size and thickness
	Tray 2/3/4	Not supported
Orientation	Face down	
Driver Media Type	Letterhead	
Weight	60–90 g/m² (16–24 lb)	
Duplexing	See page 66 for supported sizes (face down—top of page first).	

Postcards

Try printing your data on a sheet of plain paper first to check placement.

Capacity	**Tray 1 (Manual Feed Tray)**	Up to 20 postcards, depending on their thickness
	Tray 2/3/4	Not supported
Orientation	Face down	
Driver Media Type	Postcard	
Weight	60–163 g/m² (16–90 lb bond)	
Duplexing	Not supported	

Use postcards that are

- Approved for laser printers

DO NOT use postcards that are

- Coated
- Designed for inkjet printers
- Precut or perforated
- Preprinted or multicolored

If the postcard is warped, press on the warped area before putting it in Tray 1.

Transparencies

Do not fan transparencies before loading them. Resulting static electricity may cause printing errors.

If you touch the face of the transparencies with your bare hands, print quality may be affected.

Keep the printer path clean. Transparencies are especially sensitive to a dirty media path. If there are shadows on either the top or the bottom of the sheets, see chapter 8, "Maintaining the Printer" .

Remove transparencies as soon as possible from the output tray to avoid static buildup.

You can print continuously with transparencies. However, this could affect the media feed, depending on the media quality, static buildup, and printing environment.

Try printing your data on a sheet of plain paper first to check placement.

If you have problems feeding 20 sheets, try loading only 1–10 sheets at a time. Loading a large number of transparencies at one time may cause static buildup, thus causing feeding problems.

Capacity	**Tray 1 (Manual Feed Tray)**	Up to 20 transparencies, depending on their thickness
	Tray 2/3/4	Not supported
Orientation	Face down	
Driver Media Type	Transparency	
Duplexing	Not supported	

Always first test a small quantity of a particular type of transparency.

Use transparencies that are

- Approved for laser printing

DO NOT use transparencies that

- Have static electricity that will cause them to stick together
- Are specified for inkjet printers only

Glossy Stock

Test all glossy stock to ensure acceptable performance and to ensure that the image does not shift.

Capacity	**Tray 1 (Manual Feed Tray)**	Up to 20 glossy stock sheets, depending on their thickness.
	Tray 2/3/4	Not supported
Orientation	Face down	
Driver Media Type	Glossy	
Weight	91–210 g/m² (25–55.9 lb bond)	
Duplexing	Not supported	

DO NOT use glossy stock that is

- Mixed with any other media in Tray 1 (as this will cause printer misfeeding)

What Is the Guaranteed Imageable (Printable) Area?

The printable area on all media sizes is up to 4 mm (0.157") from the edges of the media.

Each media size has a specific imageable area, the maximum area on which the printer can print clearly and without distortion.

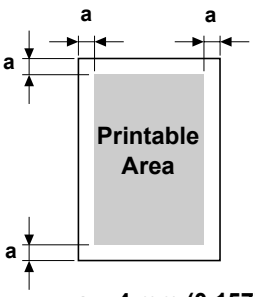

a = 4 mm (0.157")

This area is subject to both hardware limits (the physical media size and the margins required by the printer) and software constraints (the amount of memory available for the full-page frame buffer). The guaranteed imageable (printable) area for all media sizes is the page size minus 4 mm (0.157") from all edges of the media.

Imageable Area—Envelopes

Envelopes have a nonguaranteed imageable area that varies with envelope type.

The envelope print orientation is determined by your application.

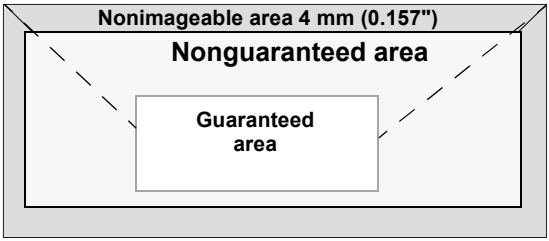

Page Margins

Margins are set through your application. Some applications allow you to set custom page sizes and margins while others have only standard page sizes and margins from which to choose. If you choose a standard format, you may lose part of your image (due to imageable area constraints). If you can custom-size your page in your application, use those sizes given for the imageable area for optimum results.

Loading Media

How do I load media?

Take off the top and bottom sheets of a ream of paper. Holding a stack of approximately 100 sheets at a time, fan the stack to prevent static buildup before inserting it in a tray.

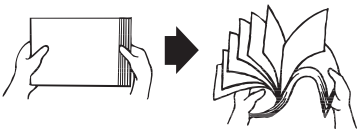

Do not fan transparencies.

Note

Although this printer was designed for printing on a wide range of media types, it is not intended to print exclusively on a single media type except plain paper. Continuous printing on media other than plain paper (such as envelopes, labels, thick stock, or transparencies) may adversely affect print quality or reduce engine life.

When refilling media, first remove any media remaining in the tray. Stack it with the new media, even the edges, then reload it.

Tray 1 (Manual Feed Tray)

For details on the types and sizes of media that can be printed from Tray 1, refer to “Media Specifications” on page 66.

Loading Plain Paper

1 Open Tray 1.

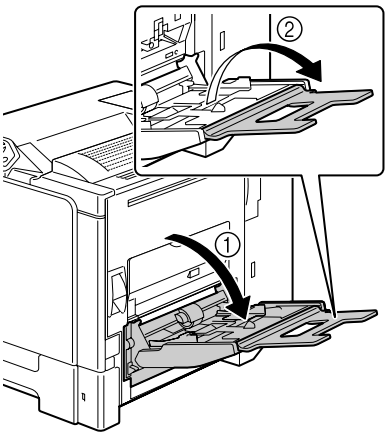

2 Slide the media guides to provide more space between them.

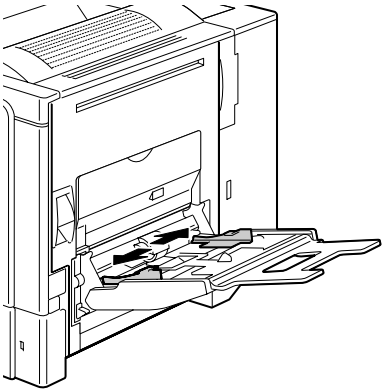

3 Press down on the center of the paper-lifting plate until the left and right locking tabs (white) lock into place.

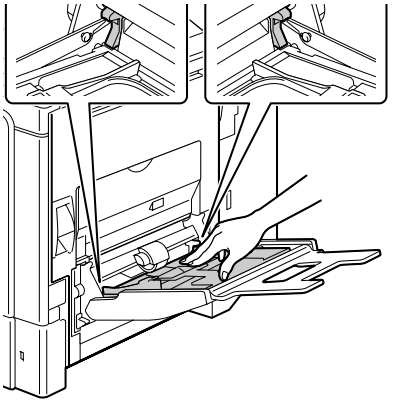

4 Load the paper face down in the tray.

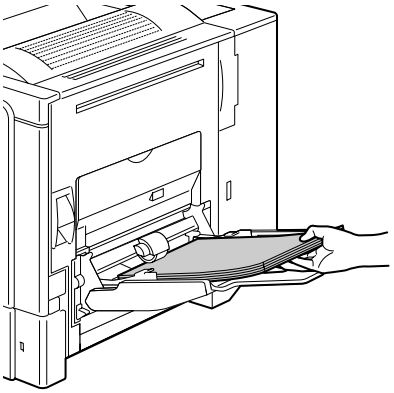

Do not load paper above the line. Up to 100 sheets (80 g/m^2 [22 lb]) of plain paper can be loaded into the tray at one time.

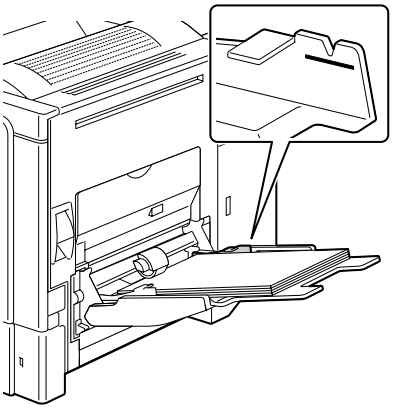

5 Slide the media guides against the edges of the paper.

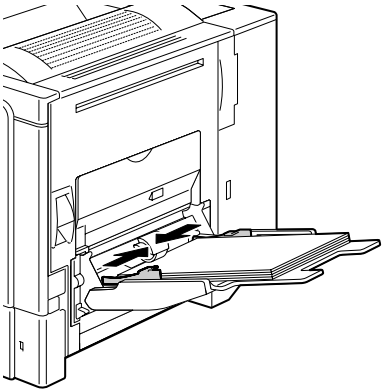

Other Media

When loading media other than plain paper, set the media mode (Envelope, Label, Thick 1, Thick 2, Glossy, or Transparency) in the driver for optimum print quality.

Loading Envelopes

1 Pull the lever, and then open the right side cover.

Before opening the right side cover, fold up Tray 1.

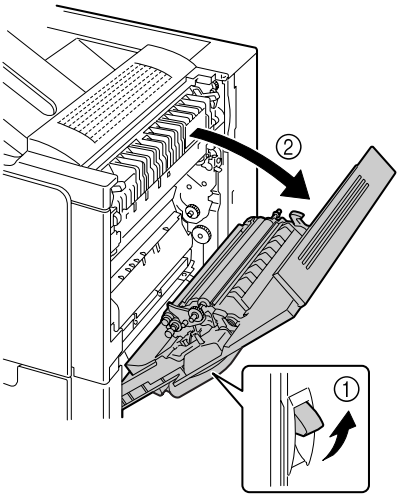

2 Open the door at the side of the right side cover.

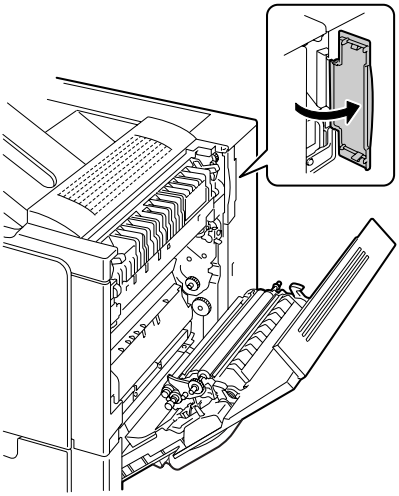

3 Turn the two dials on the fuser unit to the setting for envelopes.

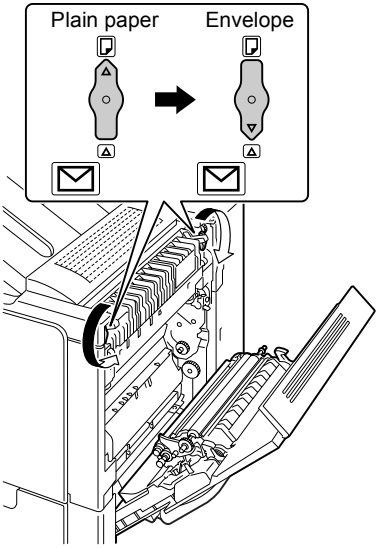

4 Close the door at the side of the right side cover.

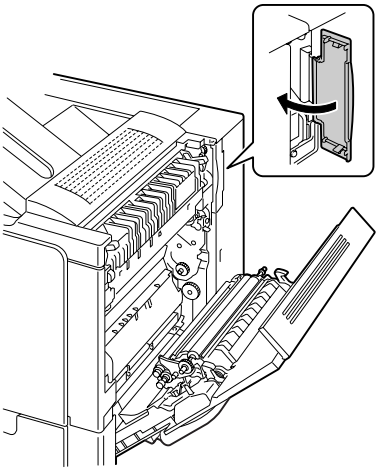

5 Close the right side cover.

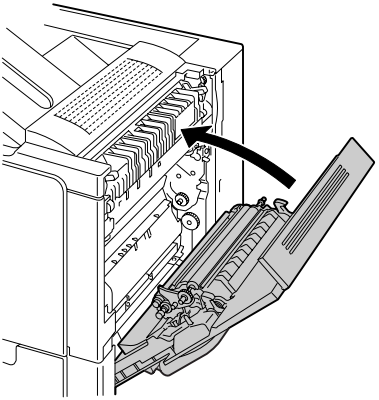

6 Open Tray 1.

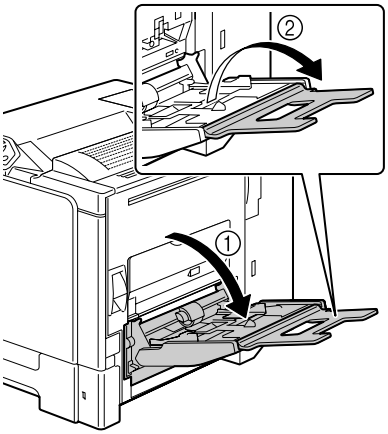

7 Slide the media guides to provide more space between them.

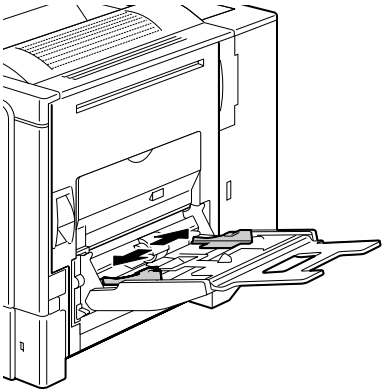

8 Press down on the center of the paper-lifting plate until the left and right locking tabs (white) lock into place.

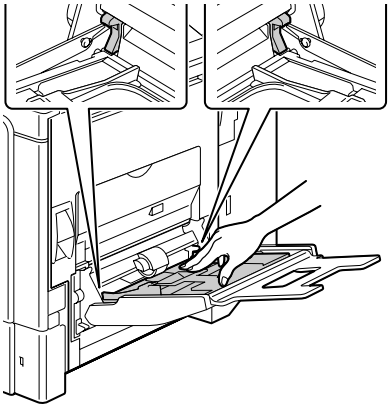

9 Load the envelopes flap side up in the tray.

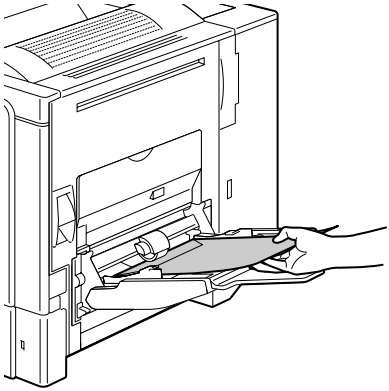

Before loading envelopes, press them down to make sure that all air is removed, and make sure that the folds of the flaps are firmly pressed; otherwise the envelopes may become wrinkled or a media misfeed may occur.

Up to 10 envelopes can be loaded into the tray at one time.

For envelopes with the flap along the long edge, load the envelopes with the flap toward the right of Tray 1.

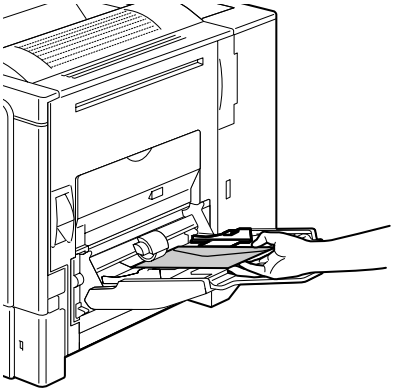

10 Slide the media guides against the edges of the envelopes.

Before printing on plain paper, be sure to return the dials on the fuser unit to the setting for plain paper.

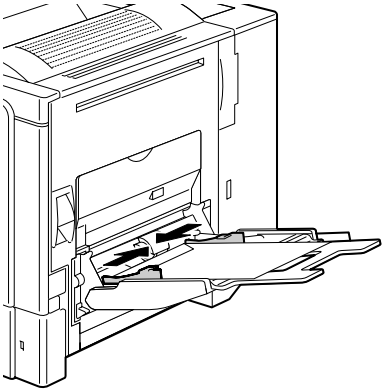

Loading Label Sheets/Postcards/Thick Stock/Glossy Stock and Transparencies

1 Open Tray 1.

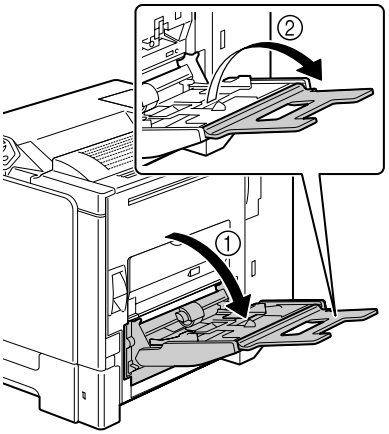

2 Slide the media guides to provide more space between them.

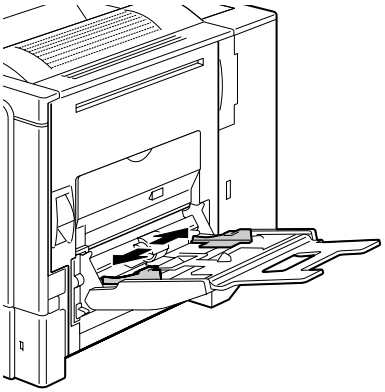

3 Press down on the center of the paper-lifting plate until the left and right locking tabs (white) lock into place.

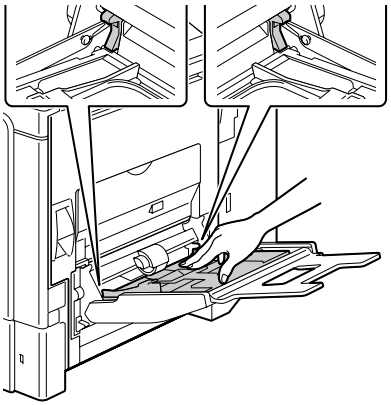

4 Load the media face down in the tray.

Up to 20 sheets can be loaded into the tray at one time.

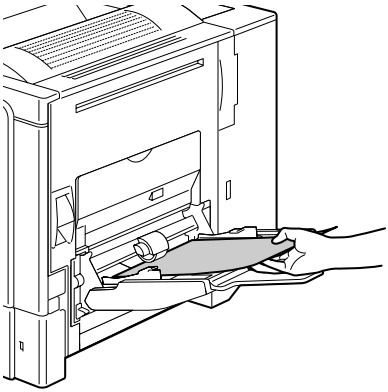

5 Slide the media guides against the edges of the media.

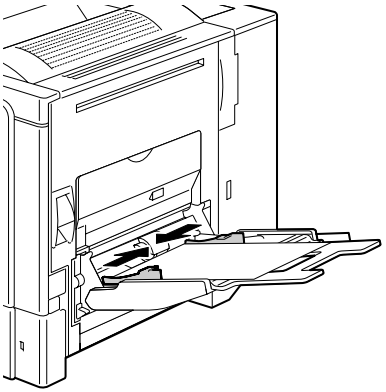

Tray 2

Loading Plain Paper

1 Pull out Tray 2.

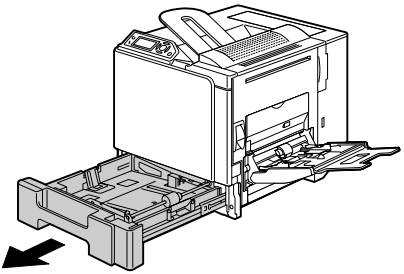

2 Press down the media pressure plate to lock it into place.

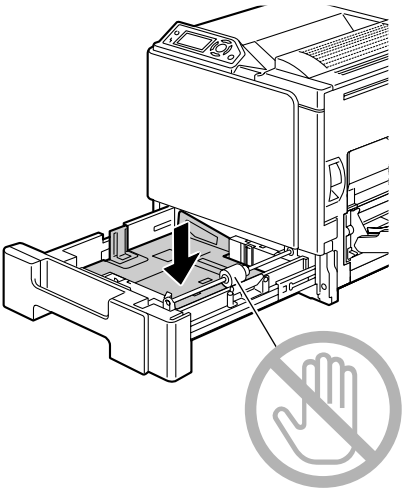

3 Load the paper face up in the tray.

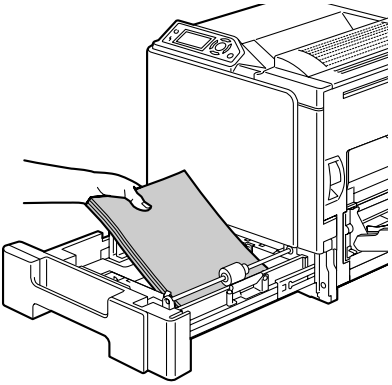

Do not load above the ▼ mark. Up to 500 sheets (80 g/m^2 [22 lb]) of plain paper can be loaded into the tray at one time.

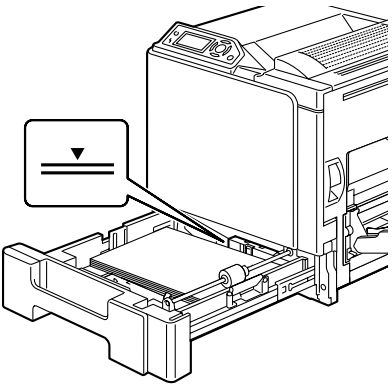

4 Close Tray 2.

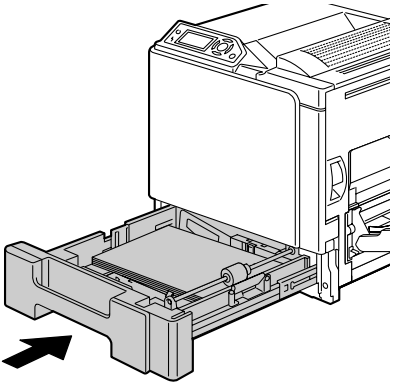

Tray 3/4 (Optional Lower Feeder Units)

Loading Plain Paper

1 Pull out Tray 3 (Tray 4).

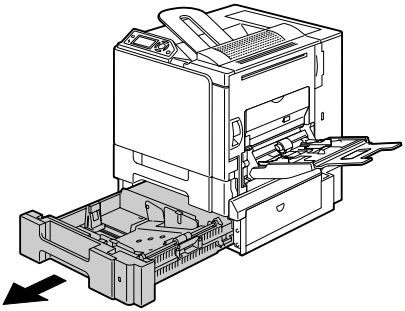

2 Press down the media pressure plate to lock it into place.

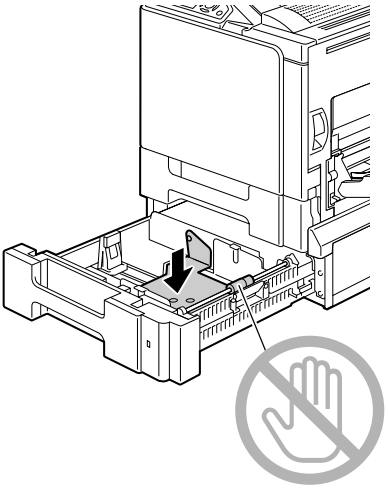

3 Slide the media guides to provide more space between them.

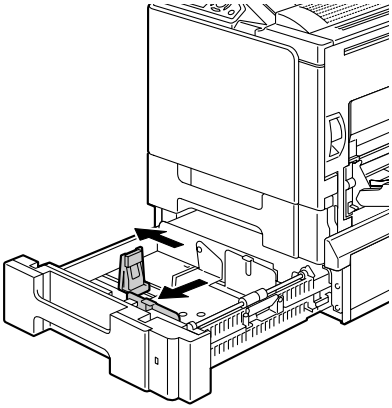

4 Load the paper face up in the tray.

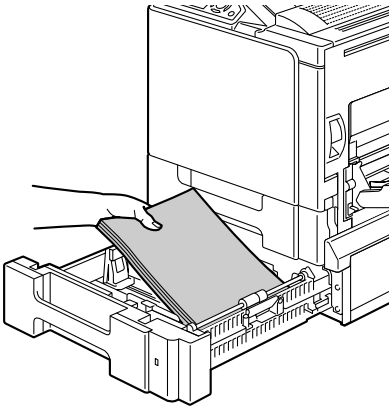

Do not load above the ▼ mark. Up to 500 sheets (80 g/m^2 [22 lb]) of plain paper can be loaded into the tray at one time.

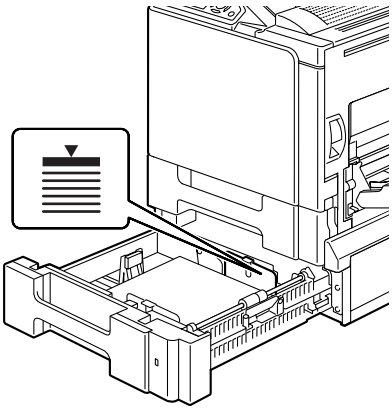

5 Slide the media guides against the edges of the paper.

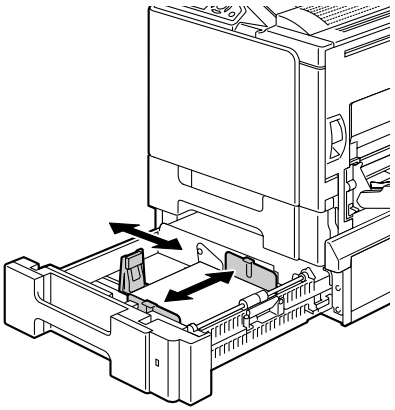

6 Close Tray 3 (Tray 4).

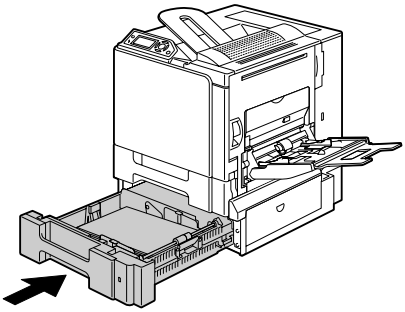

Duplexing

Select paper with high opacity for duplex (2-sided) printing. Opacity refers to how effectively paper blocks out what is written on the opposite side of the page. If the paper has low opacity (high translucency), then the printed data from one side of the page will show through to the other side. Check your application for margin information. For best results, print a small quantity to make sure the opacity is acceptable.

Duplex (2-sided) printing can be done manually or can be done automatically with the duplex option installed and selected.

Note

Only plain paper, 60–90 g/m^2 (16–24 lb bond) can be autoduplexed. See “Media Specifications” on page 66.

Duplexing envelopes, labels, postcards, thick stock, glossy stock or transparencies is not supported.

How do I autoduplex?

You should verify that the duplex option is physically installed on the printer to successfully duplex the job.

Check your application to determine how to set your margins for duplex printing.

The following Binding Position settings are available.

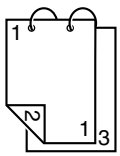	If “Short Edge” is selected, the pages will be laid out to flip at the top.
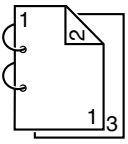	If “Long Edge” is selected, the pages will be laid out to flip at the side.

In addition, if “N-up” has been set to “Booklet”, autoduplex printing is performed.

The following Order settings are available when “Booklet” is selected.

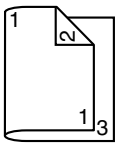	If “Left Binding” is selected, the pages can be folded as a left-bound booklet.
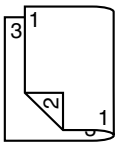	If “Right Binding” is selected, the pages can be folded as a right-bound booklet.

1 Load plain paper into the tray.

2 From the printer driver, specify duplex printing (Layout tab in Windows).

3 Click **OK**.

With autoduplexing, the back side is printed first, and then the front side is printed.

Output Tray

All printed media is output to the face-down output tray on top of the printer. This tray has a capacity of approximately 250 sheets (A4/Letter) of 80 g/m^2 (22 lb) paper.

If the media is stacked too high in the output tray, your printer may experience media misfeeds, excessive media curl, or static buildup.

Remove transparencies as soon as possible from the output tray to avoid static buildup.

Media Storage

How do I store media?

- Keep media on a flat, level surface in its original wrapper until it is time to load it.

  Media that has been stored for a long time out of its packaging may dry up too much and cause misfeeding.

- If media has been removed from its wrapper, place it in its original packaging and store in a cool, dark place on a level surface.
- Avoid moisture, excessive humidity, direct sunlight, excessive heat (above 35°C [95°F]), and dust.
- Avoid leaning media against other objects or placing it in an upright position.

Before using stored media, do a trial print to check print quality.

7

Replacing Consumables

Replacing Consumables

Note

Failure to follow instructions as outlined in this manual could result in voiding your warranty.

Note

If an error message (`TONER EMPTY`, `TRANS.BELT END OF LIFE`, etc.) appears, print out the configuration page, and then check the status of the other consumables. For details on the error messages, refer to "Error Messages (Warning:)" on page 161. For details on printing the configuration page, refer to "Printing a Configuration Page" on page 128.

About Toner Cartridges

Your printer uses four toner cartridges: black, yellow, magenta, and cyan. Handle the toner cartridges carefully to avoid spilling toner inside the printer or on yourself.

Install only new toner cartridges in your printer. If a used toner cartridge is installed, the indicator message will not clear and the supplies status in the Status Monitor will not be updated.

The toner is nontoxic. If you get toner on your skin, wash it off with cool water and a mild soap. If you get toner on your clothes, lightly dust them off as best as you can. If some toner remains on your clothes, use cool, not hot water, to rinse the toner off.

CAUTION

If you get toner in your eyes, wash it out immediately with cool water and consult a doctor.

Refer to the following URL for recycling information.
US: printer.konicaminolta.com/products/recycle/index.asp
Europe: printer.konicaminolta.com

Note

Do not use refilled toner cartridges or unapproved toner cartridges. Any damage to the printer or quality problems caused by a refilled toner cartridge or an unapproved toner cartridge will void your warranty. No technical support is provided to recover from these problems.

When replacing a toner cartridge, refer to the following table. For optimum print quality and performance, use only approved KONICA MINOLTA toner cartridges for your specific printer type, as listed in the table below. You can find your printer type and the toner cartridge part numbers on the consumables reorder label inside the front cover your printer.

Printer Type	Printer Parts Number	Toner Cartridge Type	Toner Cartridge Parts Number
AM	5250219-100	Standard-Capacity Toner Cartridge -Black (K)	1710580-001
		Standard-Capacity Toner Cartridge -Yellow (Y)	1710580-002
		Standard-Capacity Toner Cartridge -Magenta (M)	1710580-003
		Standard-Capacity Toner Cartridge -Cyan (C)	1710580-004
		High-Capacity Toner Cartridge -Black (K)	1710602-005
		High-Capacity Toner Cartridge -Yellow (Y)	1710602-006
		High-Capacity Toner Cartridge -Magenta (M)	1710602-007
		High-Capacity Toner Cartridge -Cyan (C)	1710602-008
EU	5250219-200	Standard-Capacity Toner Cartridge -Black (K)	1710604-001
		Standard-Capacity Toner Cartridge -Yellow (Y)	1710604-002
		Standard-Capacity Toner Cartridge -Magenta (M)	1710604-003
		Standard-Capacity Toner Cartridge -Cyan (C)	1710604-004
		High-Capacity Toner Cartridge -Black (K)	1710604-005
		High-Capacity Toner Cartridge -Yellow (Y)	1710604-006
		High-Capacity Toner Cartridge -Magenta (M)	1710604-007
		High-Capacity Toner Cartridge -Cyan (C)	1710604-008
AP	5250219-350 5250219-400	Standard-Capacity Toner Cartridge -Black (K)	1710583-001
		Standard-Capacity Toner Cartridge -Yellow (Y)	1710583-002
		Standard-Capacity Toner Cartridge -Magenta (M)	1710583-003
		Standard-Capacity Toner Cartridge -Cyan (C)	1710583-004
		High-Capacity Toner Cartridge -Black (K)	1710605-005
		High-Capacity Toner Cartridge -Yellow (Y)	1710605-006
		High-Capacity Toner Cartridge -Magenta (M)	1710605-007
		High-Capacity Toner Cartridge -Cyan (C)	1710605-008

Note

Do not touch the OPC drum surface. This could lower image quality.

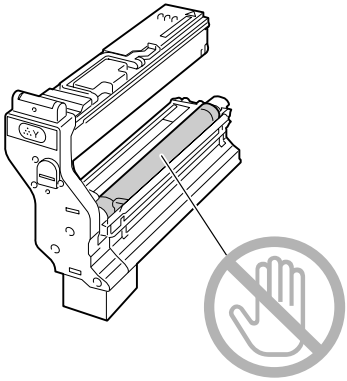

Keep toner cartridges:

- In their packaging until you're ready to install them.
- In a cool, dry location away from sunlight (due to heat).

  The maximum storage temperature is 35° C (95° F) and the maximum storage humidity is 85% (noncondensing). If the toner cartridge is moved from a cold place to a warm, humid place, condensation may occur, degrading print quality. Allow the toner to adapt to the environment for about one hour before use.

- Level during handling and storage.

  Do not hold, stand or store cartridges on their ends or turn them upside down; the toner inside the cartridges may become caked or unequally distributed.

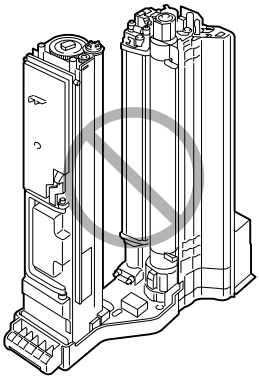

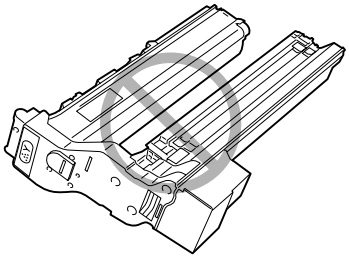

- Away from salty air and corrosive gases such as aerosols.

Replacing a Toner Cartridge

Note

Be careful not to spill toner while replacing a toner cartridge. If toner spills, immediately wipe it off with a soft, dry cloth.

If TONER EMPTY on the SYS DEFAULT/TONER EMPTY menu is set to STOP, the message TONER EMPTY REPLACE X (where "X" represents the color of the toner) appears when a toner cartridge becomes empty. Follow the steps below to replace the toner cartridge. As an example, the following procedure describes the operation for the yellow toner cartridge.

If TONER EMPTY on the SYS DEFAULT/TONER EMPTY menu is set to CONTINUE, you are advised to replace the indicated toner cartridge when the message TONER EMPTY X appears.

1 Check the message window to see which color of toner is empty.

2 Open the printer's front cover.

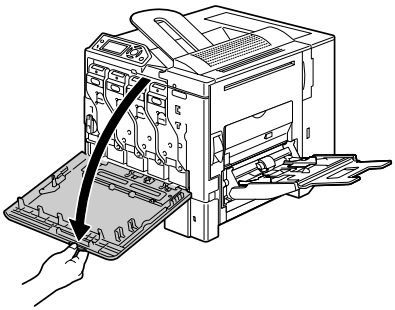

3 Press down the area marked “Push” on the toner cartridge to be replaced, and then slide the cartridge out until the handle is visible.

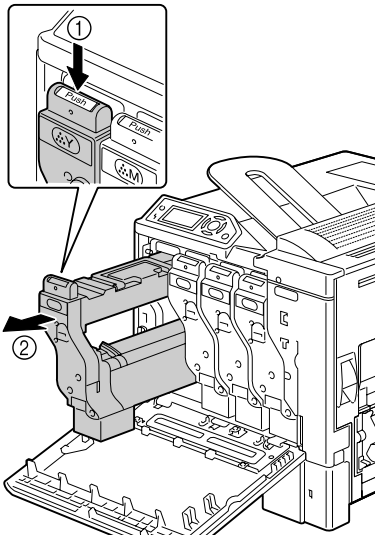

4 Grasp the handle as shown in the illustration, and then slide the cartridge all the way out of the printer.

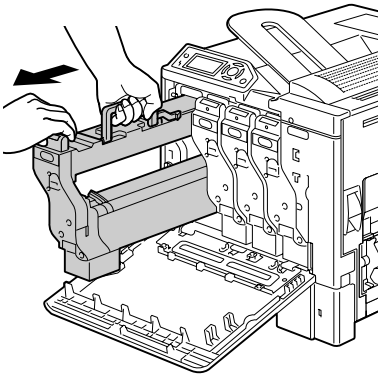

Note

Dispose of the used toner cartridge according to your local regulations.
Do not burn the toner cartridge.
For details, refer to “About Toner Cartridges” on page 94.

5 Check the color of the new toner cartridge to be installed.

6 Shake the cartridge to distribute the toner.

Make sure that the OPC drum cover is securely attached before shaking the cartridge.

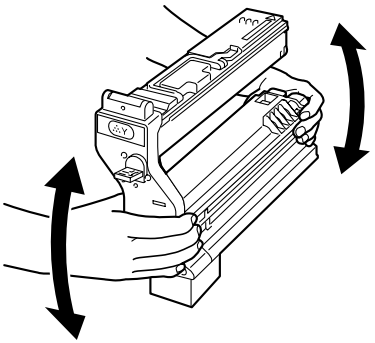

7 Lift the OPC drum cover on the toner cartridge toward you.

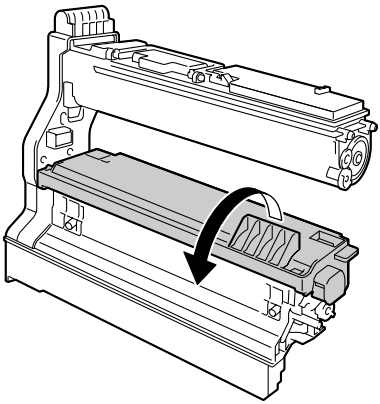

8 Slide the OPC drum cover off of the toner cartridge.

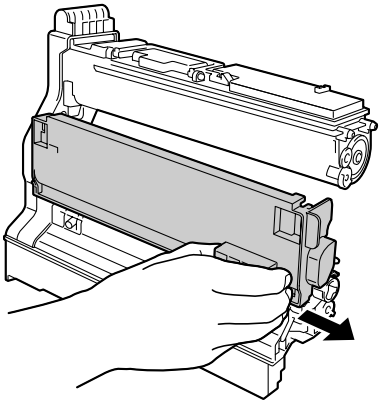

9 Holding the toner cartridge by its handle, slide the cartridge into the printer.

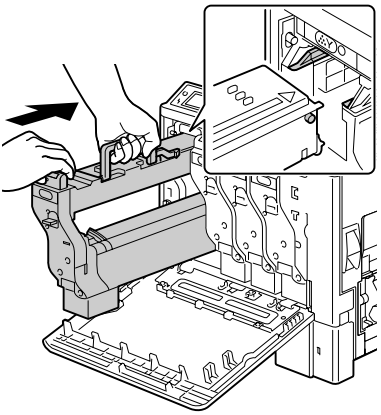

10 Lower the handle, and then slide the cartridge the rest of the way into the printer until it locks into place.

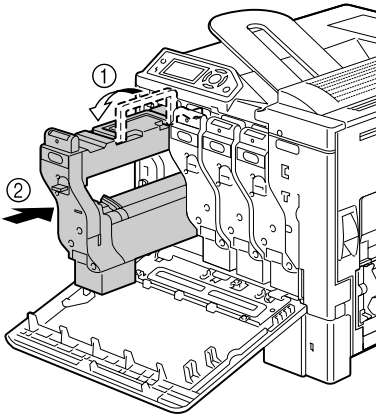

11 Remove the protective film from the toner cartridge by slowly pulling it straight out.

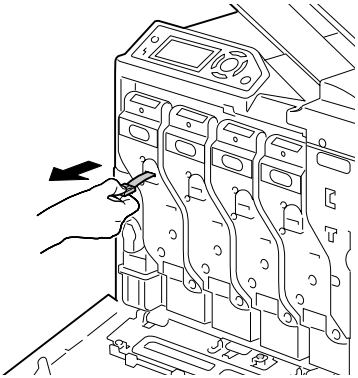

12 Close the front cover.

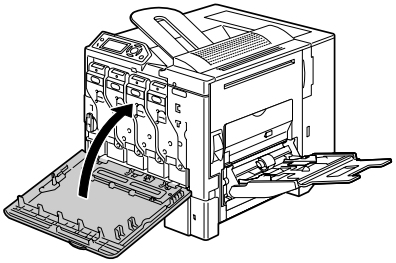

If the toner cartridge is not fully inserted, the front cover cannot be closed.

The printer must complete a 75-second calibration cycle after the toner cartridge has been replaced. If you open the front cover before the message `READY` *appears, the printer stops and repeats the calibration cycle.*

Replacing the Waste Toner Bottle

When the waste toner bottle becomes full, the message `WASTE TONER FULL/REPLACE BOTTLE` appears in the message window. The printer stops and will not start again until the waste toner bottle is replaced.

1 Open the printer's front cover.

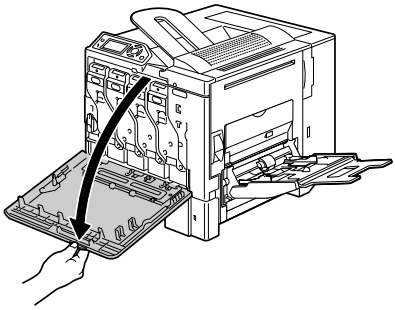

2 Turn the dial on the waste toner bottle counterclockwise until it is in the unlock position.

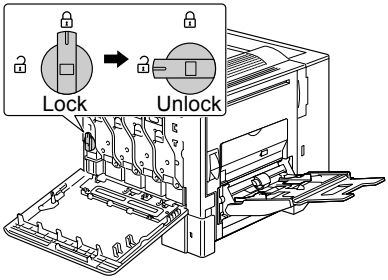

3 Slowly slide the waste toner bottle all the way out.

Be careful not to spill any toner.

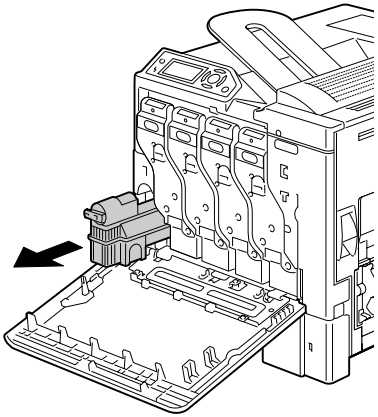

4 Remove the cap attached to the side of the waste toner bottle, and then attach it at the position shown in the illustration.

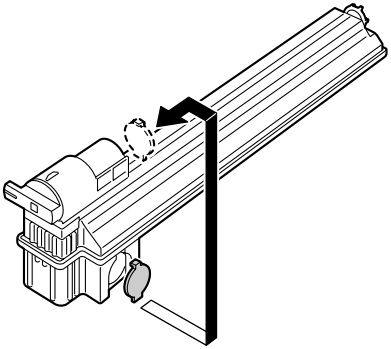

5 Dispose of the waste toner bottle.

Note

Dispose of the used waste toner bottle according to your local regulations. Do not burn the waste toner bottle.

6 Prepare a new waste toner bottle.

Before installing the waste toner bottle, be sure that the dial on the waste toner bottle is unlocked.

7 Slide the waste toner bottle all the way into the printer.

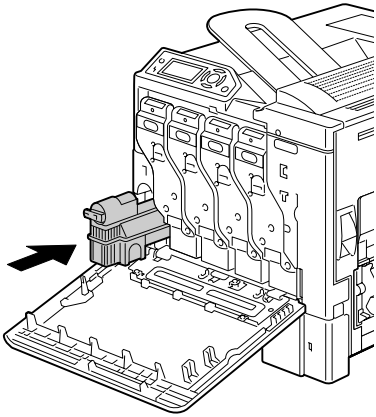

8 Turn the dial clockwise until the waste toner bottle is in the locked position.

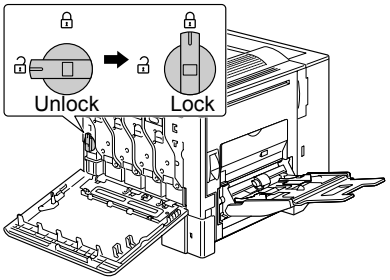

9 Close the front cover.

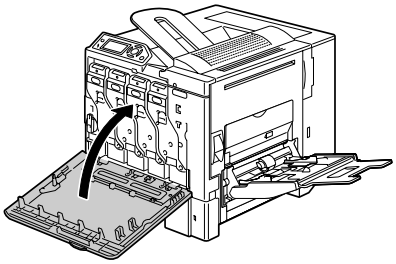

If the waste toner bottle is not fully inserted or if the dial is not locked, the front cover cannot be closed.

Replacing the Transfer Roller

When the time to replace the transfer roller is reached, the message TRANS.ROLLER/END OF LIFE appears. Printing can continue even after this message appears; however, since the print quality is reduced, the transfer roller should be replaced immediately.

When replacing the transfer roller, also replace the ozone filter. A new ozone filter is included with the new transfer roller.

Replacing the Transfer Roller

1 Pull the lever, and then open the right side cover.

Before opening the right side cover, fold up Trya 1.

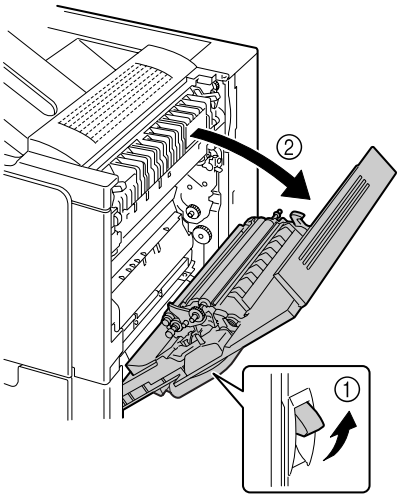

2 While pushing the levers to the inside, move the roller presser toward you.

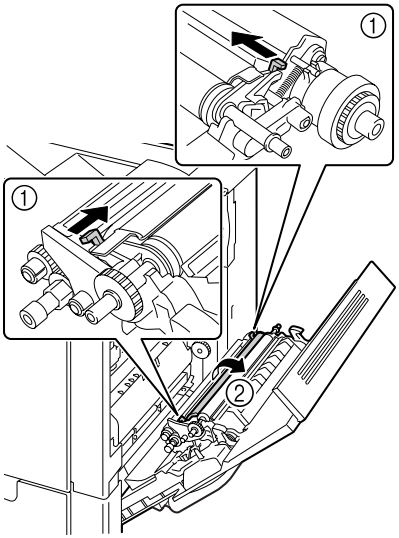

3 While continuing to press the levers, remove the transfer roller.

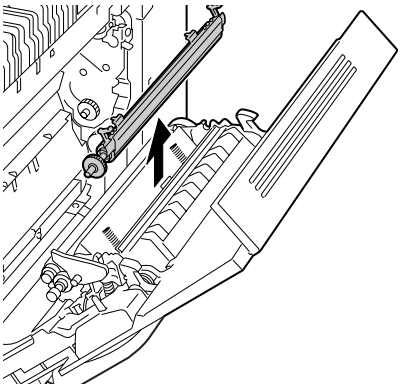

4 Prepare a new transfer roller.

5 While pressing the levers, insert the shaft of the transfer roller into the bearings.

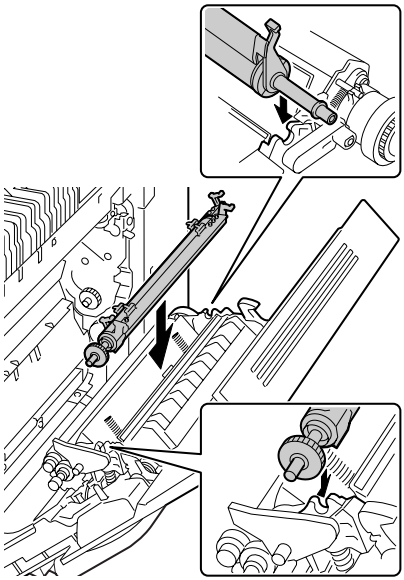

6 Move the levers away from you until it snaps into place.

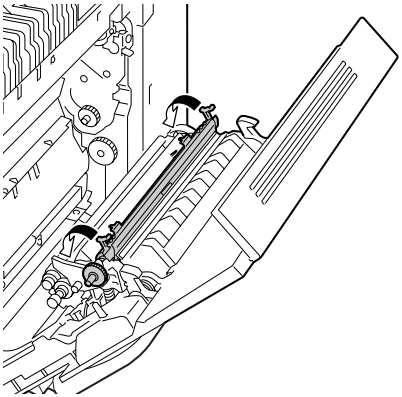

7 Close the right side cover.

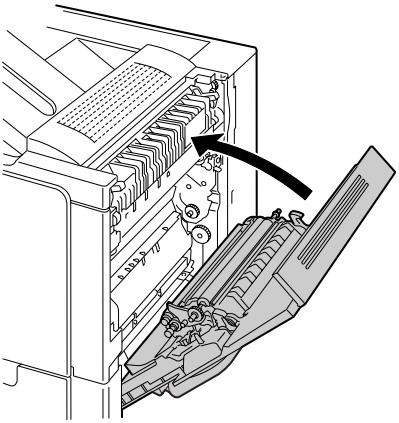

8 Reset the counter in the QUALITY/SUPPLIES/REPLACE/TRANS. ROLLER menu.

9 Replace the ozone filter, using the following procedure.

Replacing the Ozone Filter

1 Remove the ozone filter from the printer.

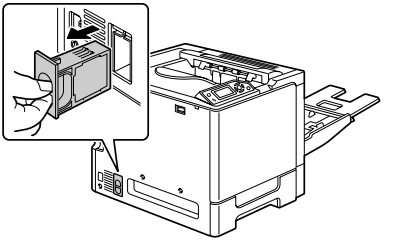

2 Slide the new ozone filter into the printer until it snaps into place.

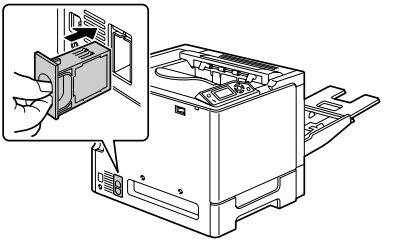

Replacing the Transfer Belt Unit

When the time to replace the transfer belt unit is reached, the message TRANS. BELT/END OF LIFE appears. Printing can continue even after this message appears; however, since the print quality is reduced, the transfer belt unit should be replaced immediately.

1 Open the printer's front cover.

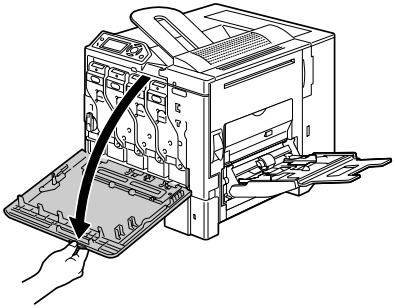

2 Turn the dial to unlock the waster toner bottle.

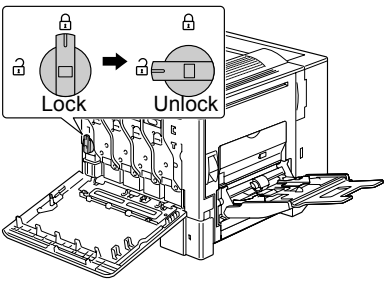

3 Pull out the waste toner bottle and the toner cartridges for about 10 cm (4").

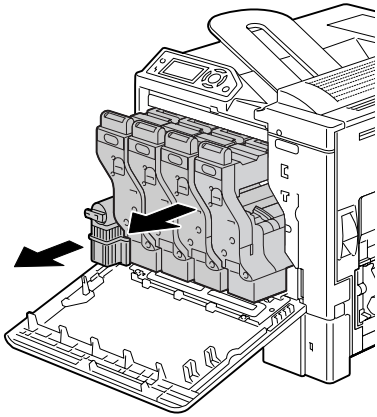

4 Using a coin, remove the screws on the left side cover.

Be careful not to lose the screws.

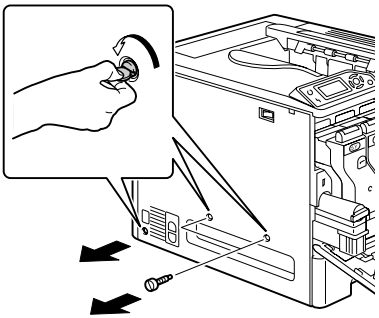

5 Remove the left side cover.

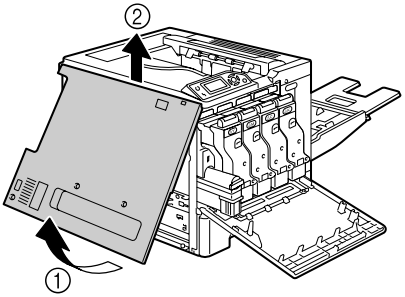

6 Open the right side cover, and then use a coin to loosen the screws securing the transfer belt unit.

Before opening the right side cover, fold up Tray 1.

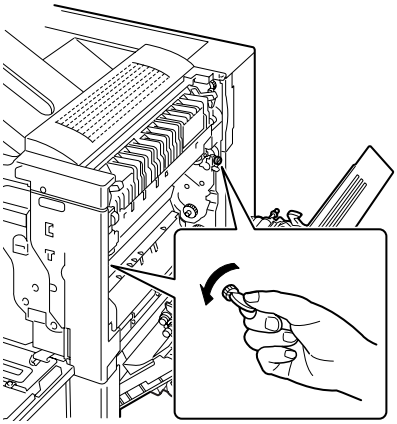

7 From the side where the left side cover was removed, hold the arm, and then carefully pull out the transfer belt unit.

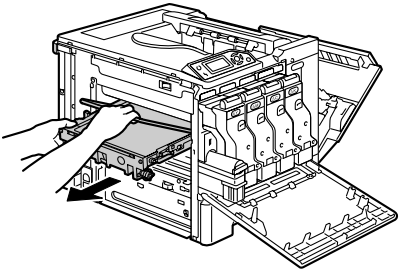

8 Prepare a new transfer belt unit.

Be careful not to touch the surface of the belt.

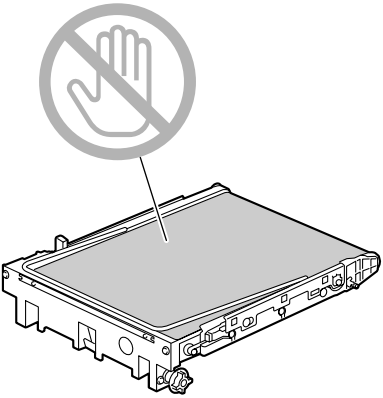

9 Insert the new transfer belt unit along the rails.

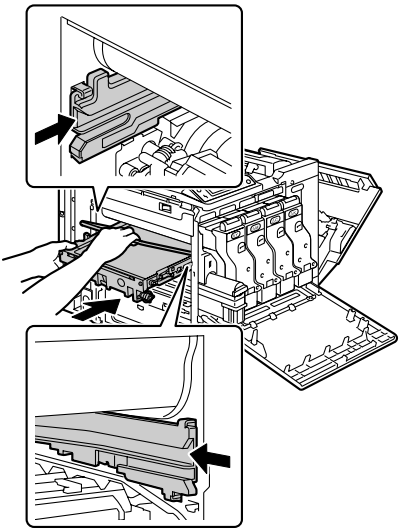

10 Fully insert the transfer belt unit.

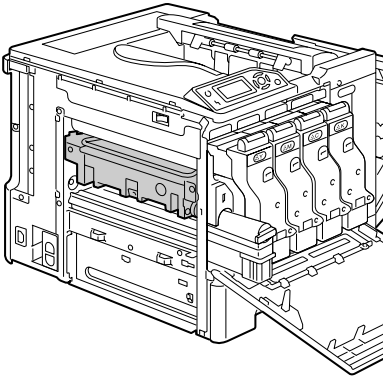

11 From the right side cover side, tighten the screws to secure the transfer belt unit and then close the right side cover.

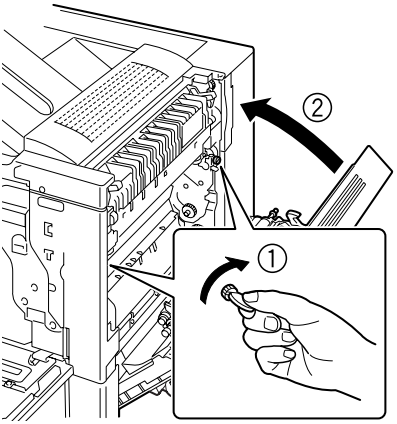

12 Insert the waste toner bottle and the toner cartridges all the way in until they snap into place.

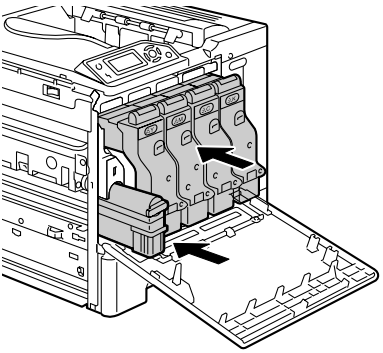

13 Turn the dial to lock the waste toner bottle into place.

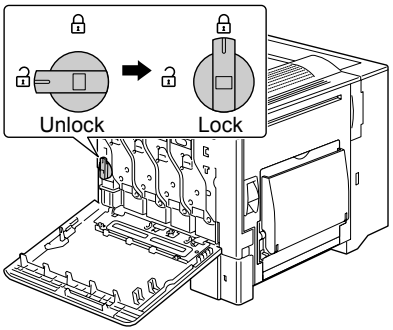

14 Attach the left side cover, and then tighten the screws.

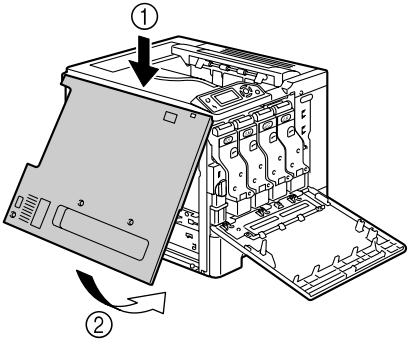

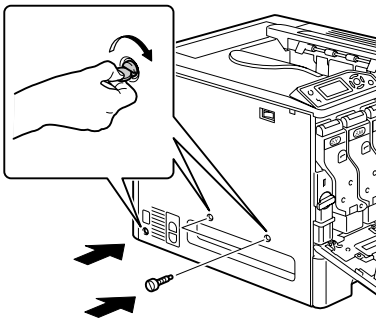

15 Close the front cover.

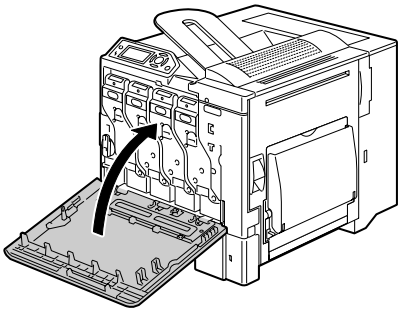

16 Reset the counter in the QUALITY/SUPPLIES/REPLACE/TRANS. BELT menu.

Replacing the Backup Battery

If the backup battery is dead, the printer's date and time cannot be retained. Follow the procedure described below to replace the backup battery.

Note

It's very important to protect the printer controller board and any associated circuit boards from electrostatic damage. Before performing this procedure, review the antistatic caution on page 170. In addition, always handle circuit boards by the edges only.

1 Turn off the printer and disconnect the power cord and interface cables.

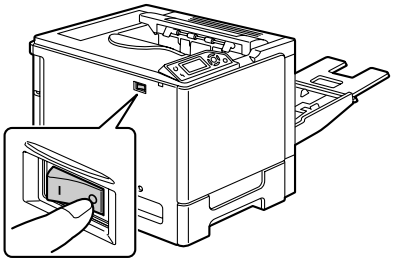

2 Using a screwdriver, remove the screw. Then, slide the rear cover to the right and remove it.

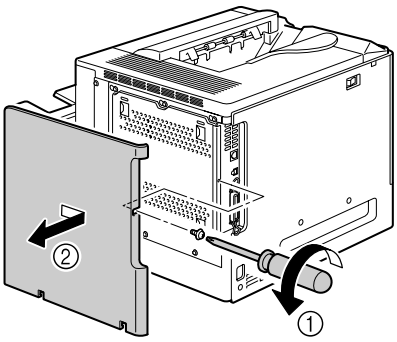

3 Using a screwdriver, loosen the seven screws. (Do not remove them from the printer.)

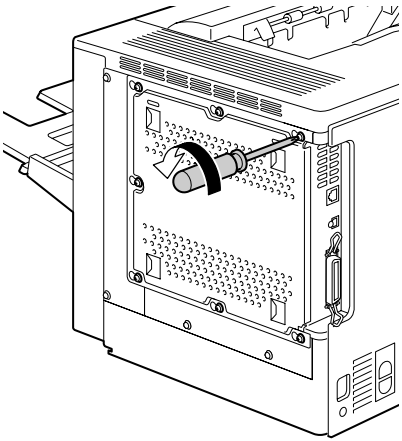

4 Slide the panel slightly to the right and lift it off the printer.

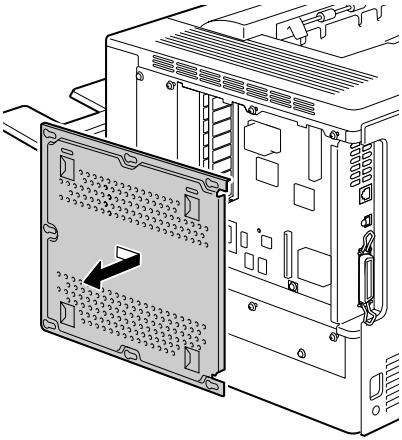

5 Remove the hook, and then remove the backup battery.

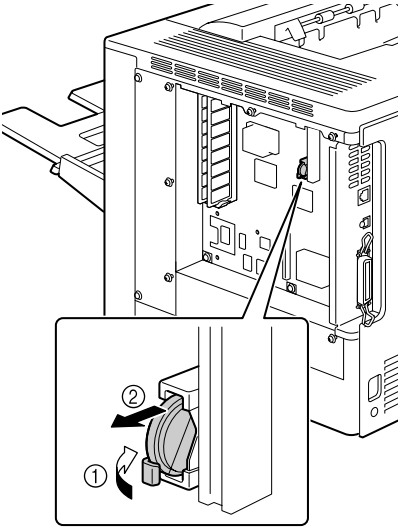

6 Insert a new backup battery.

When inserting the new backup battery, be sure that the + side faces toward the left.

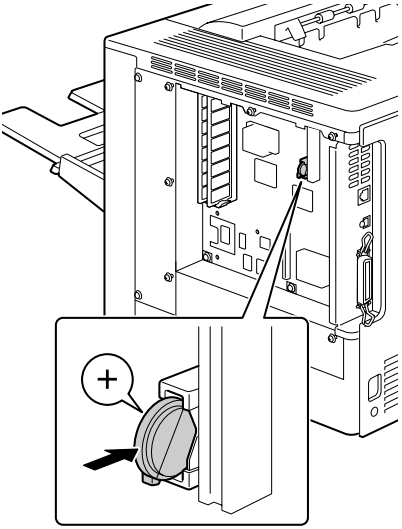

7 Reinstall the panel and tighten the seven screws.

8 Attach the rear cover.

9 Reconnect all interface cables.

10 Reconnect the power cord, and turn on the printer.

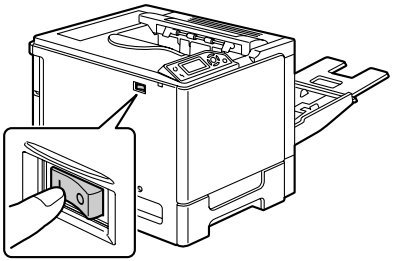

11 Use DATE on the SYS DEFAULT/CLOCK menu to set the date, and use TIME on the SYS DEFAULT/CLOCK menu to set the time.

8

Maintaining the Printer

Maintaining the Printer

CAUTION

Read all caution and warning labels carefully, making sure to follow any instructions contained in them. These labels are located on the inside of the printer's covers and the interior of the printer body.

Handle the printer with care to preserve its life. Abuse handling may cause damage and void your warranty. If dust and paper scraps remain on the inside or outside of the printer, printer performance and print quality will suffer, so the printer should be cleaned periodically. Keep the following guidelines in mind.

WARNING!

Turn off the printer, unplug the power cord, and disconnect all interface cables before cleaning. Do not spill water or detergent into the printer; otherwise the printer will be damaged and an electric shock may occur.

CAUTION

The fuser unit is hot. When the right side cover is opened, the fuser unit temperature drops gradually (one hour wait time).

- Be careful when cleaning the inside of the printer or removing media misfeeds, as the fuser unit and other internal parts may be very hot.
- Do not place anything on top of the printer.
- Use a soft cloth to clean the printer.
- Never spray cleaning solutions directly on the printer's surface; the spray could penetrate through the air vents of the printer and damage the internal circuits.
- Avoid using abrasive or corrosive solutions or solutions that contain solvents (such as alcohol and benzene) to clean the printer.
- Always test any cleaning solution (such as mild detergent) on a small inconspicuous area of your printer to check the solution's performance.
- Never use sharp or rough implements, such as wire or plastic cleaning pads.
- Always close the printer's covers gently. Never subject the printer to vibration.
- Do not cover the printer immediately after using it. Turn it off and wait until it cools down.

- Do not leave the printer's covers open for any length of time, especially in well-lit places; light may damage the toner cartridges.
- Do not open the printer during printing.
- Do not tap media stacks on the printer.
- Do not lubricate or disassemble the printer.
- Do not tilt the printer.
- Do not touch the electrical contacts, gears, or laser devices. Doing so may damage the printer and cause the print quality to deteriorate.
- Keep media in the output tray at a minimum level. If the media is stocked too high, your printer may experience media misfeeds and excessive media curl.
- Make sure two people are available to lift the printer when moving it.
  Keep the printer level to avoid toner spillage.

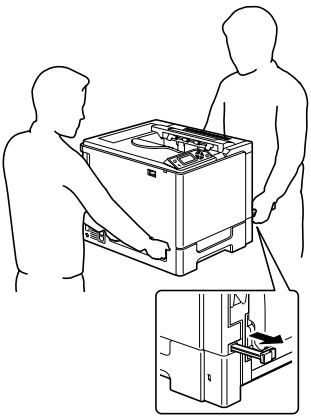

- When lifting the printer, fold up Tray 1, and then lift the printer as shown in the illustration at the right.

  Even if an optional lower feeder unit is installed, be sure to lift the printer as shown below. Do not grasp the grip of Tray 3, Tray 4 or the right side cover; otherwise, the lower feeder unit may be damaged.

Front

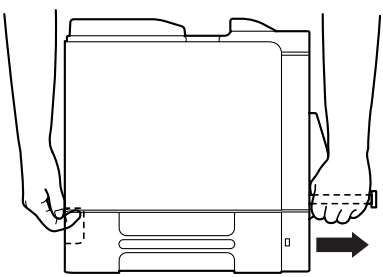

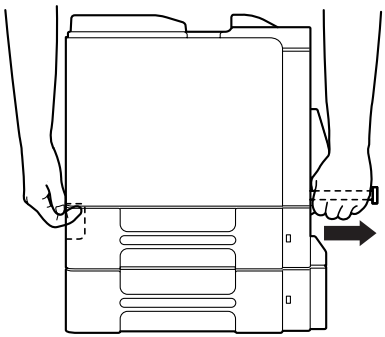

- If you get toner on your skin, wash it off with cool water and a mild soap.

CAUTION

If you get toner in your eyes, wash it out immediately with cool water and consult a doctor.

- Make sure any parts removed during cleaning are replaced before you plug in the printer.

Cleaning the Printer

CAUTION

Be sure to turn off the printer and unplug the power cord before cleaning.

Exterior

Control Panel

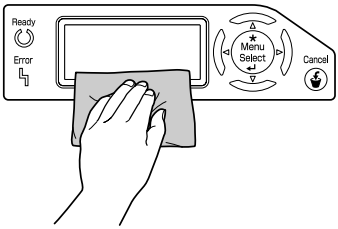

Ventilation Grill

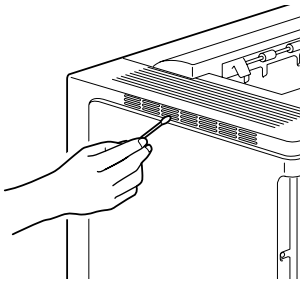

Printer Exterior

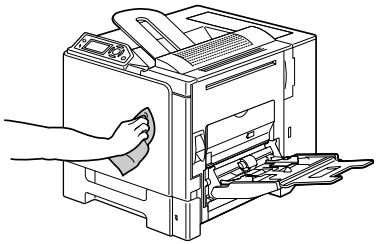

Media Rollers

The accumulation of paper dust and other debris on the media rollers can cause media-feeding problems.

Cleaning the Media Feed Rollers (Tray 2/3/4)

1 Pull out the tray.

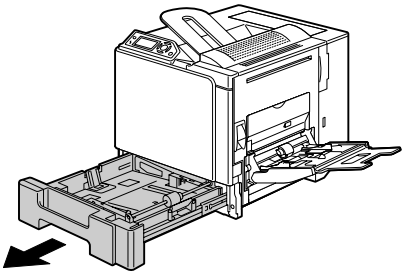

2 Clean the media feed rollers by wiping them with a soft, dry cloth.

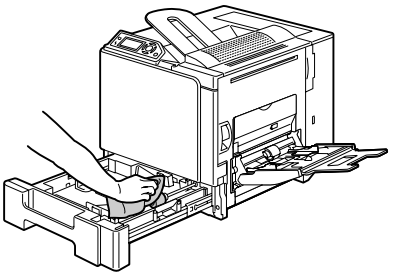

3 Close the tray.

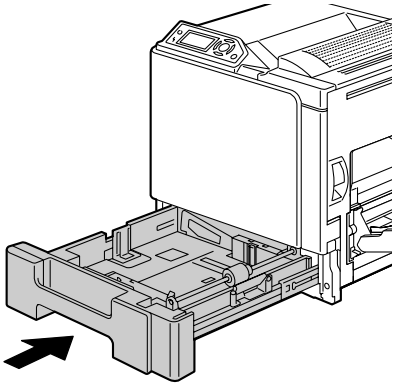

Cleaning the Duplex Option Feed Rollers

1 Open the duplex cover.

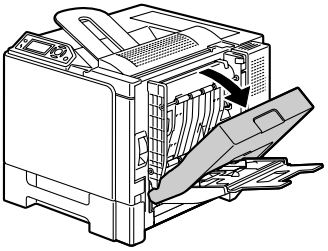

2 Clean the feed rollers by wiping them with a soft, dry cloth.

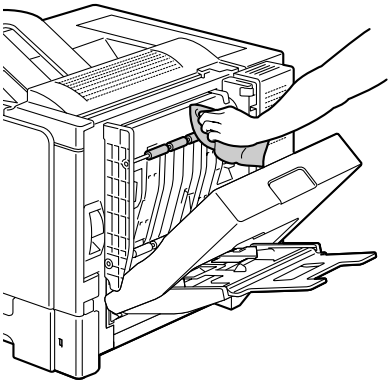

3 Close the duplex cover.

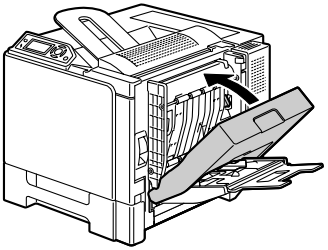

Cleaning the Media Transfer Rollers for Tray 3 and 4

1 Open the right side cover of Tray 3 (Tray 4).

Before opening the right side cover of Tray 3 (Tray 4), fold up Tray 1.

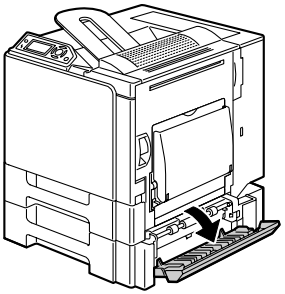

2 Clean the media transfer rollers by wiping them with a soft, dry cloth.

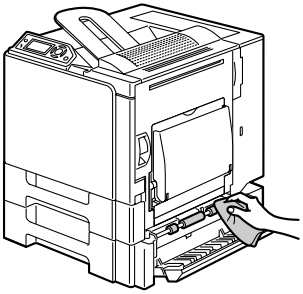

3 Close the right side cover of Tray 3 (Tray 4).

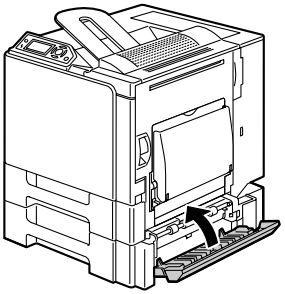

Cleaning the Laser Lens

This printer is constructed with four laser lenses. Clean all lenses as described below. The laser lens cleaning tool should be attached to the rear side of the printer.

1 Open the printer's front cover.

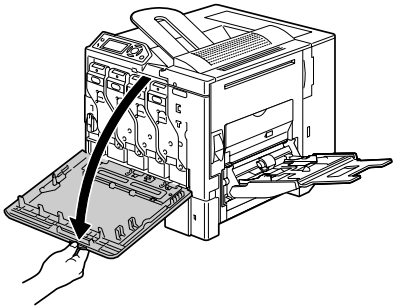

2 Align the marks at the bottom of the toner cartridge, insert the laser lens cleaning tool between the waste toner bottle and the yellow toner cartridge with the cleaning pad pointing down, and then slide it back and forth 2 or 3 times.

3 Clean between each of the toner cartridges in the same way.

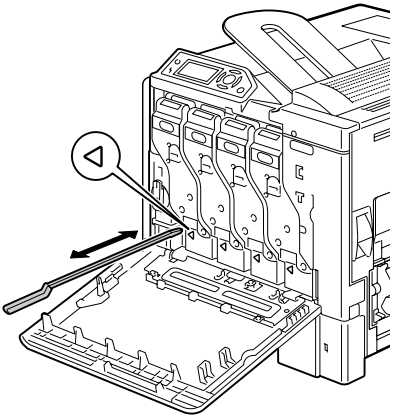

The laser lens cleaning tool is included with the printer. Safely store the laser lens cleaning tool so that it will not be lost.

4 Close the front cover.

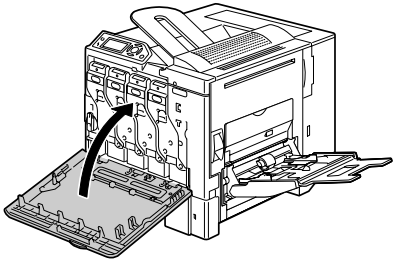

5 Return the laser lens cleaning tool to its holder on the rear side of the printer.

9 Troubleshooting

Introduction

This chapter provides information to aid you in resolving printer problems you may encounter, or at least guide you to the proper sources for help.

Printing the configuration page	Page 128
Preventing media misfeeds	Page 129
Understanding the media path	Page 130
Clearing media misfeeds	Page 131
Solving problems with media misfeeds	Page 146
Solving other problems	Page 149
Solving problems with printing quality	Page 154
Status, error, and service messages	Page 160

Printing a Configuration Page

Print a configuration page to verify the printer is printing correctly, or to check the printer configuration.

Press Key (once)	Until Display Reads
	READY
* Menu Select ↵	PRINT MENU If the hard disk is installed, the PROOF/PRINT menu appears at the top of the menu. Press the Down key to select the PRINT menu.
* Menu Select ↵	CONFIGRATION PG PRINT
* Menu Select ↵	The configuration page prints and the printer goes back to READY.

Preventing Media Misfeeds

Make sure that...
Media matches the printer specifications.
Media is flat, especially on the leading edge.
The printer is on a hard, flat, level surface.
You store media in a dry location away from moisture and humidity.
You remove transparencies from the output tray immediately after printing to avoid static buildup.
You always adjust the media guides in the tray *after* inserting the media *(a guide that is not properly adjusted can cause poor print quality, media misfeeds, and printer damage).*
You load the media printing-side up in the tray *(many manufacturers place an arrow on the end of the wrapper to indicate the printing side).*

Avoid...
Media that is folded, wrinkled, or excessively curled.
Double feeding *(remove the media and fan the sheets—they may be sticking together).*
Fanning transparencies since this causes static.
Loading more than one type/size/weight of media in a tray at the same time.
Overfilling the trays.
Allowing the output tray to overfill *(the output tray has a 250-sheet capacity—misfeeding may occur if you allow more than 250 sheets of media to accumulate at one time).*
Allowing the output tray to fill with more than a few transparencies.

Understanding the Media Path

Understanding the printer's media path will help you locate media misfeeds.

1 Output tray

2 Toner cartridge

3 Transfer belt unit

4 Laser

5 Tray 2

6 Tray 3 (optional)

7 Tray 4 (optional)

8 Tray 1 (Manual feed tray)

9 Duplex option

10 Fuser unit

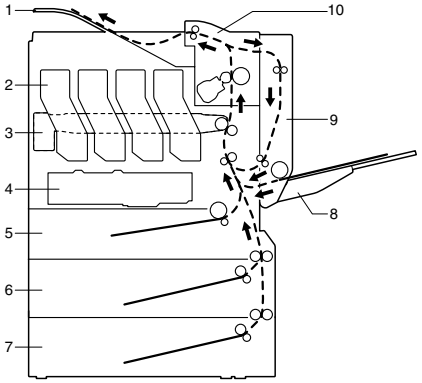

Clearing Media Misfeeds

To avoid damage, always remove misfed media gently, without tearing it. Any piece of media left in the printer, whether large or small, can obstruct the media path and cause further misfeeds. Do not reload media that has misfed.

Note

The image is not fixed on the media before the fusing process. If you touch the printed surface, the toner may stick to your hands, so be careful not to touch the printed face when removing the misfed media. Make sure not to spill any toner inside the printer.

CAUTION

Unfused toner can dirty your hands, clothes, or anything else it gets on. If you accidentally get toner on your clothes, lightly dust them off as best as you can. If some toner remains on your clothes, use cool, not hot water, to rinse the toner off. If toner gets on your skin, wash it off with cool water and a mild soap.

CAUTION

If you get toner in your eyes, wash it out immediately with cool water and consult a doctor.

If, after clearing the media misfeed, the misfeed message in the control panel window persists, open and close the printer's covers. This should clear the misfeed message.

Media Misfeed Messages and Clearing Procedures

Media Misfeed Message	Page Reference
PAPER JAM TRAY 2	Page 133
PAPER JAM TRAY 3	Page 137
PAPER JAM TRAY 4	Page 137
PAPER JAM DUPLEX 1	Page 139
PAPER JAM DUPLEX 2	Page 139
PAPER JAM FUSER/EXIT	Page 140
PAPER JAM TRAY 1	Page 143
PAPER JAM SECOND TRANS	Page 143
PAPER JAM VERTICAL TRANS	Page 137, Page 143

If the message PAPER JAM/VERTICAL TRANS appears, check for media misfeeds in the transfer roller section of the right side covers for Tray 3 and/or Tray 4.

Clearing a Media Misfeed in Tray 2

1 Pull the lever, and then open the right side cover.

Before opening the right side cover, fold up Tray 1.

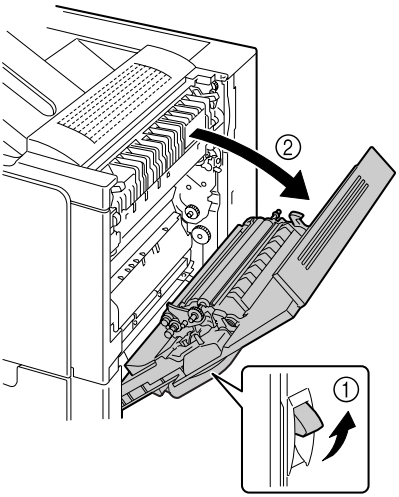

2 Carefully pull out the misfed media.

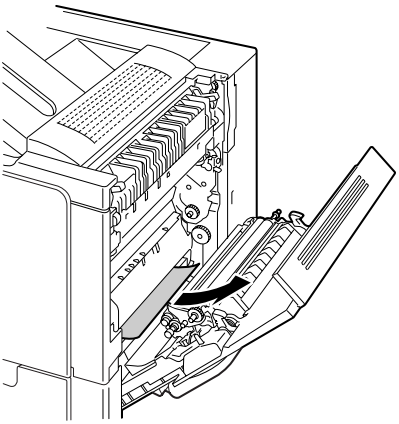

CAUTION

The area around the fuser unit is extremely hot.
Touching anything other than the indicated levers and dials may result in burns. If you get burned, immediately cool the skin under cold water, and then seek professional medical attention.

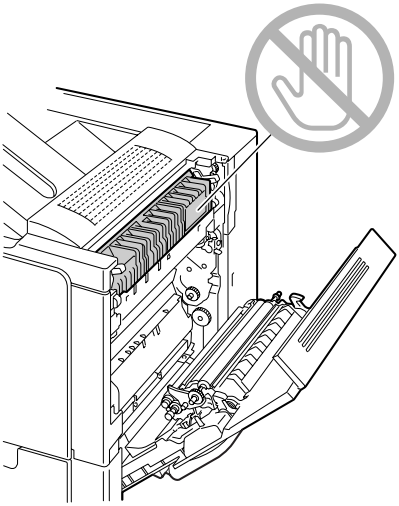

Note

Decreased print quality may result if the surface of the image transfer belt or the transfer roller is touched.
Be careful not to touch the surface of the image transfer belt or transfer roller.

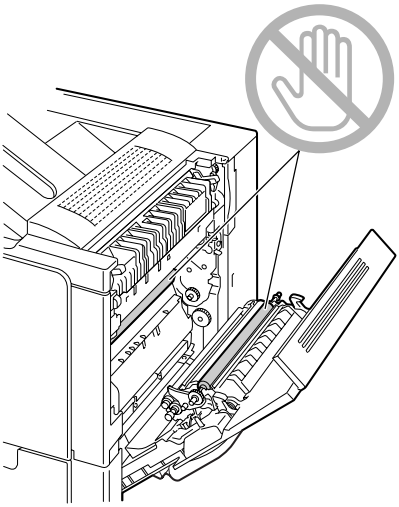

3 Close the right side cover.

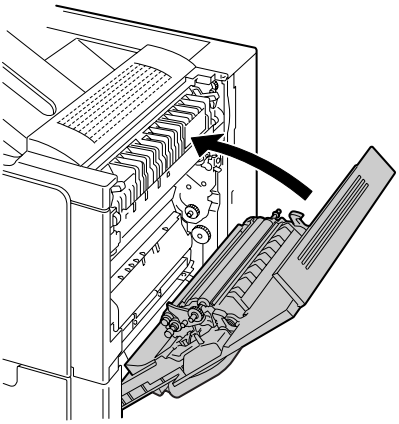

4 Pull out Tray 2, and then remove all media from the tray.

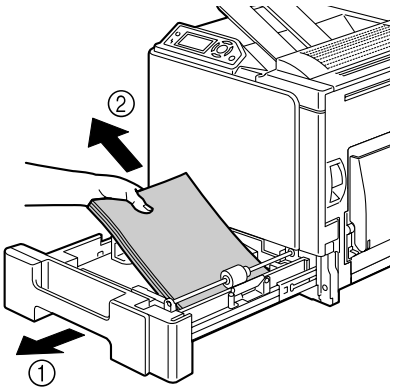

5 Fan the media you removed and then align it well.

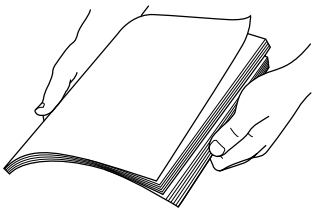

If transparencies are loaded, do not fan them; otherwise, static electricity may be produced, resulting in another media misfeed.

6 Load the media face up in Tray 2.

Make sure that the media is flat.

Do not load paper above the ▼ mark.

Slide the media guides against the edges of the media.

7 Close Tray 2.

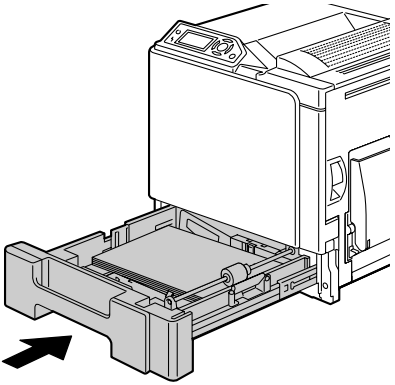

Clearing a Media Misfeed in Tray 3/4

1 Open the right side cover of Tray 3 (Tray 4).

Before opening the right side cover of Tray 3 (Tray 4), fold up Tray 1.

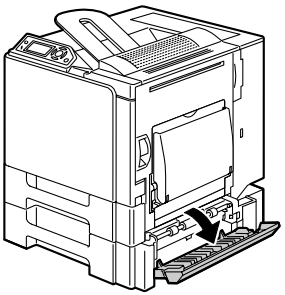

2 Carefully pull out the misfed media.

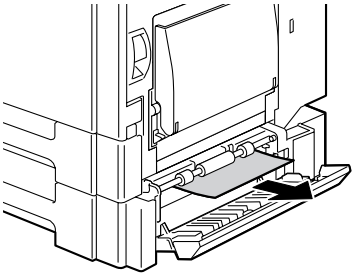

3 Close the right side cover of Tray 3 (Tray 4).

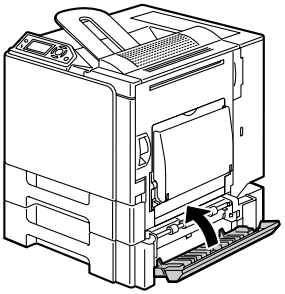

4 Pull out Tray 3 (Tray 4), and then remove all paper from the tray.

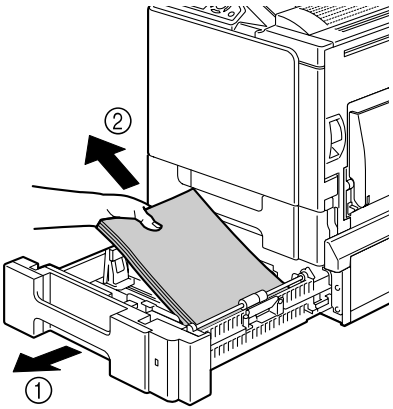

5 Fan the paper you removed and then align it well.

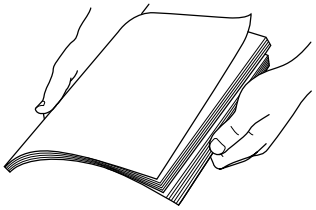

6 Load the paper face up in Tray 3 (Tray 4).

Make sure that the paper is flat.

Do not load paper above the ▼ mark.

Slide the media guides against the edges of the paper.

7 Close Tray 3 (Tray 4).

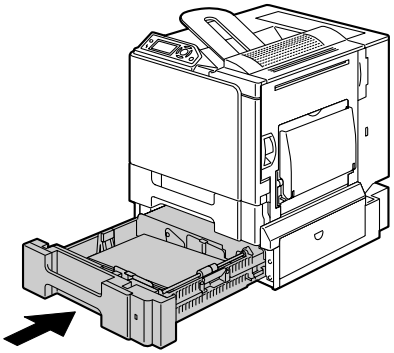

Clearing a Media Misfeed from the Duplex Option

1 Open the duplex cover.

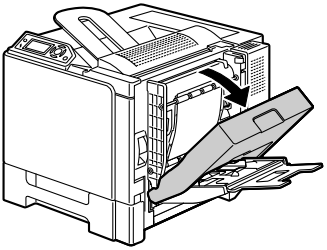

2 Carefully pull out the misfed media.

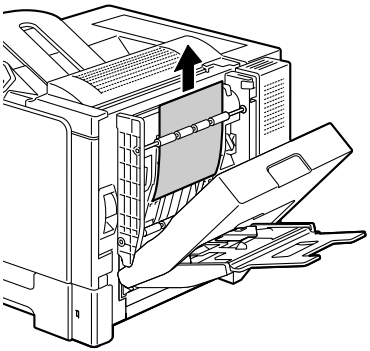

3 Close the duplex cover.

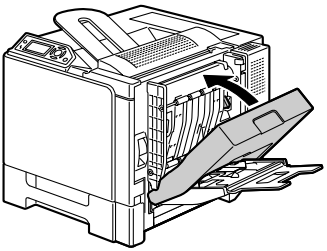

Clearing a Media Misfeed from the Fuser Unit

1 Pull the lever, and then open the right side cover.

Before opening the right side cover, fold up Tray 1.

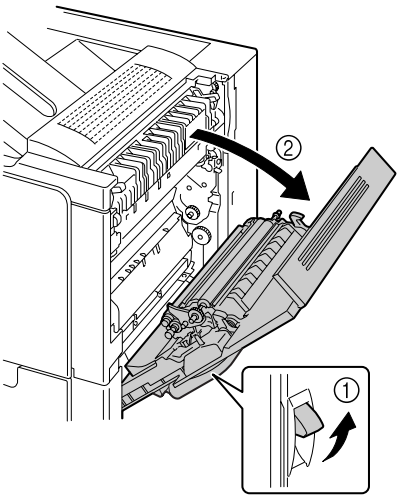

2 Push up the levers of the fuser unit cover, and then open the cover.

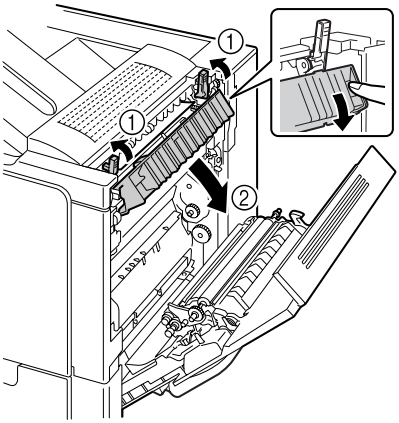

3 Carefully pull out the misfed media.

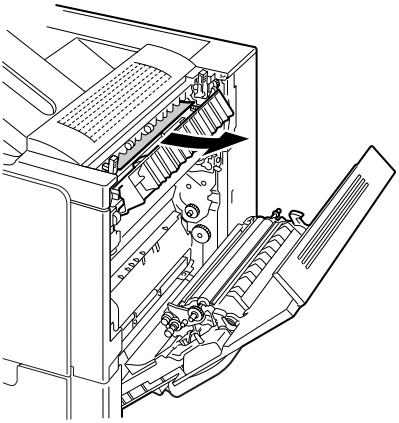

CAUTION

The area around the fuser unit is extremely hot.
Touching anything other than the indicated levers and dials may result in burns. If you get burned, immediately cool the skin under cold water, and then seek professional medical attention.

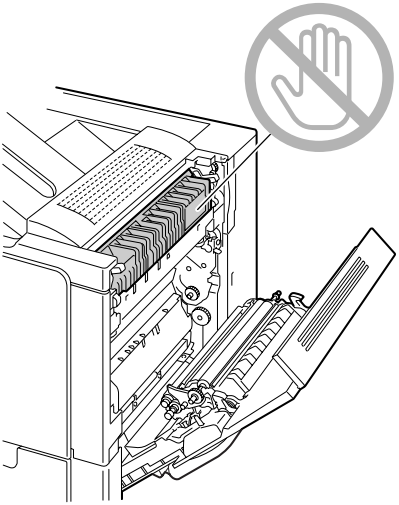

Note

Decreased print quality may result if the surface of the image transfer belt or the transfer roller is touched.
Be careful not to touch the surface of the image transfer belt or transfer roller.

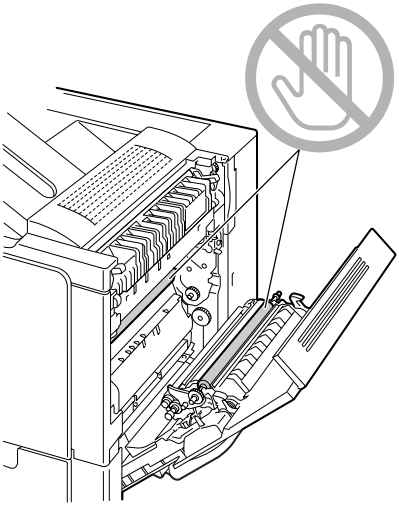

4 Push down the levers.

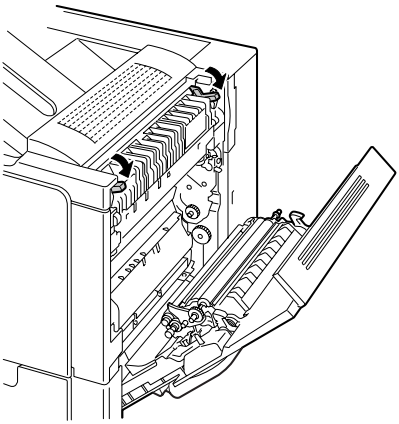

5 Close the right side cover.

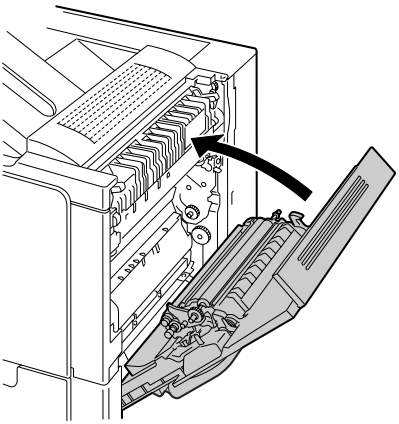

Clearing a Media Misfeed from Tray 1 (Manual Feed Tray) and Transfer Roller

1 Pull the lever, and then open the right side cover.

Before opening the right side cover, fold up Tray 1.

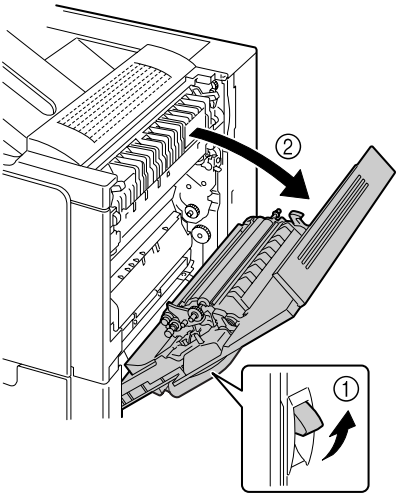

2 Carefully pull out the misfed media.

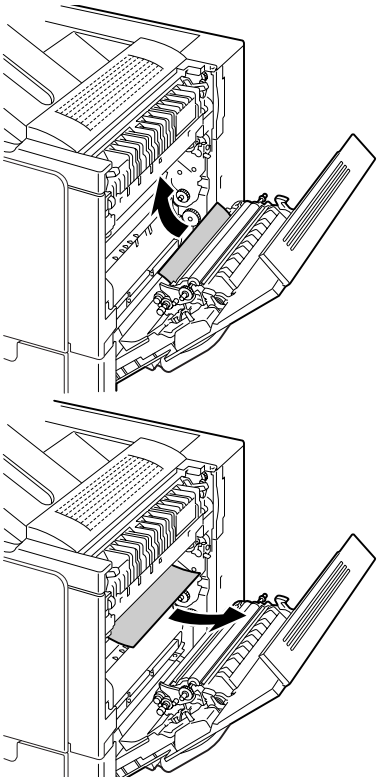

CAUTION

The area around the fuser unit is extremely hot.
Touching anything other than the indicated levers and dials may result in burns. If you get burned, immediately cool the skin under cold water, and then seek professional medical attention.

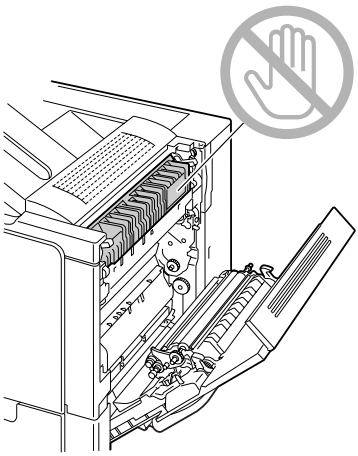

Note

Decreased print quality may result if the surface of the image transfer belt or the transfer roller is touched.
Be careful not to touch the surface of the image transfer belt or transfer roller.

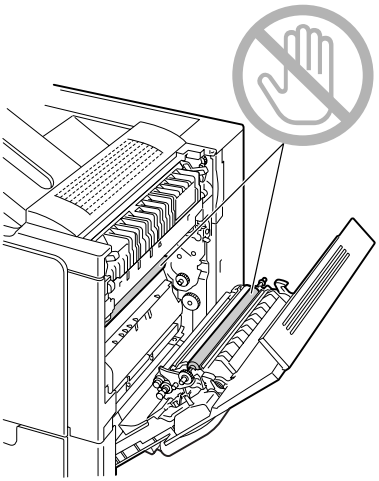

3 Close the right side cover.

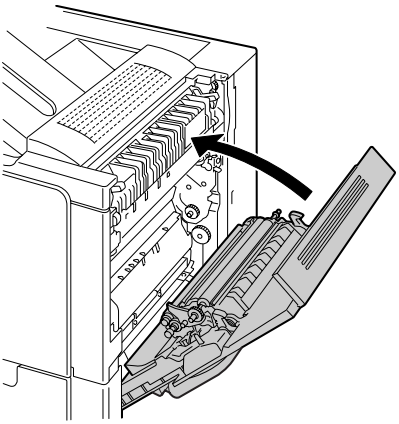

Solving Problems with Media Misfeeds

Frequent misfeeds in any area indicate that area should be checked, repaired, or cleaned. Repeated misfeeds may also happen if you're using unsupported print media.

Symptom	Cause	Solution
Several sheets go through the printer together.	The front edges of the media are not even.	Remove the media and even up the front edges, then reload it.
	The media is moist from humidity.	Remove the moist media and replace it with new, dry media.
	Too much static electricity is present.	Do not fan transparencies.
Media misfeed message stays on.	Right side cover needs to be opened and closed again to reset the printer.	Open and close the right side cover of the printer again.
	Some media remains misfed in the printer.	Recheck the media path and make sure that you have removed all of the misfed media.
Duplex option misfeeds.	Unsupported media (wrong size, thickness, type, etc.) is being used.	Use KONICA MINOLTA-approved media. See "Media Specifications" on page 66.
		Only plain paper, 60–90 g/m^2 (16–24 lb) can be autoduplexed. See "Media Specifications" on page 66.
		Make sure that you have not mixed media types in Tray 1.
		Do not duplex envelopes, labels, thick stock, or transparencies.
	Media is still being misfed.	Recheck the media path inside the duplex option and make sure that you have removed all of the misfed media.

Symptom	Cause	Solution
Media is misfeeding.	The media is not correctly positioned in the tray.	Remove the misfed media and reposition the media properly in the tray.
	The number of sheets in the tray exceeds the maximum allowed.	Remove the excess media and reload the correct number of sheets in the tray.
	The media guides are not correctly adjusted to the media size.	Adjust the media guides in the tray to match the size of the media.
	Warped or wrinkled media is loaded in the tray.	Remove the media, smooth it out, and reload it. If it still misfeeds, do not use that media.
	The media is moist from humidity.	Remove the moist media and replace it with new, dry media.
	Custom-sized media, envelopes, labels, postcards, thick stock, or transparencies are loaded in Tray 2, 3 or 4.	Special media must be loaded in Tray 1 only.
	The recommended transparency or label sheet is facing the wrong way in Tray 1.	Load the transparencies or label sheets according to the manufacturer's instructions.
	Envelopes are facing the wrong way in Tray 1.	Load the envelopes in Tray 1 so the flaps are facing up.
		If the flaps are on the long edge, load the envelopes with the flaps toward the right of the printer.

Symptom	Cause	Solution
Media is misfeeding.	Transparencies have collected static electricity in the tray.	Remove the transparencies and load them in the tray one sheet at a time. Do not fan transparencies before loading them.
	Unsupported media (wrong size, thickness, type, etc.) is being used.	Use KONICA MINOLTA-approved media. See “Media Specifications” on page 66.
	The media roller is dirty.	Clean the media supply roller. For more details, refer to “Media Rollers” on page 123.

Solving Other Problems

For details on consumables, access www.q-shop.com.

Symptom	Cause	Solution
Printer power is not on.	The power cord is not correctly plugged into the outlet.	Turn off the printer, confirm that the power cord is correctly plugged into the outlet, and then turn on the printer.
	Something is wrong with the outlet connected to the printer.	Plug another electrical appliance into the outlet and see whether it operates properly.
	The power switch is not correctly turned on (I position).	Turn the power switch off (O position), then turn it back to the on (I position).
	The printer is connected to an outlet with a voltage or frequency that does not match the printer specifications.	Use a power source with the specifications listed in appendix A, “Technical Specifications.”
Data was sent to the printer, but it doesn’t print.	An error message is displayed in the message window.	Handle according to the message displayed.
The control panel displays `TONER LOW` much sooner than expected.	One of the cartridges may be defective.	Remove the toner cartridges and check them for damage. If one is damaged, replace it.
	You printed with heavy toner coverage.	See the specifications in Appendix A.
You can’t print the configuration page.	The tray is empty.	Check that at least Tray 1 is loaded with media, in place, and secure.
	The printer’s covers aren’t closed securely.	Make sure the covers are closed securely. Close all covers gently to avoid jarring the printer. Make sure the waste toner bottle and toner cartridges are installed correctly.
	There is a media misfeed.	Clear the media misfeed.

Symptom	Cause	Solution
Images cannot be printed from the digital camera.	The digital camera transfer mode is not set to PictBridge. *Printer only supports a PictBridge compliant digital camera.*	Set the digital camera transfer mode to PictBridge.
Printing takes too much time.	The printer is set to a slow printing mode (for example, thick stock or transparency).	It takes more time to print on special media. When using regular paper, make sure that the media type is set properly in the driver.
	The printer is set to Energy Saver mode.	It takes time for printing to start in Energy Saver mode. If you do not want to use this mode, disable it. (`SYS DEFAULT/ENERGY SAVER` menu)
	The job is very complex.	Wait. No action needed.
	The printer memory is insufficient.	Add more memory.
	A toner cartridge for a different region or an unapproved genuine toner cartridge is installed (`INCORRECT CART X` is displayed in the message window).	Install a correct KONICA MINOLTA toner cartridge approved for your specific printer.
Blank pages come out during printing.	One or more of the toner cartridges are defective or empty.	Check the toner cartridges. The image will not print if one or more cartridges are empty.
	The wrong media is being used.	Check that the media type set in the driver matches the media loaded in the printer.

Symptom	Cause	Solution
Not all pages print.	The printer has the wrong kind of cable, or the printer is not configured for the correct cable and port.	Check your cable.
	The Cancel key was pressed.	Make sure no one pressed the Cancel key while your job was printing.
Not all pages print.	The tray is empty.	Check that the trays are loaded with media, in place, and secure.
	A document is printed with an overlay file which has been created by a non-magicolor 5450 driver.	Print the overlay file using a magicolor 5450 driver.
Printer resets or turns off frequently.	The power cord is not correctly plugged into the outlet.	Turn off the printer, confirm that the power cord is correctly plugged into the outlet, and then turn on the printer.
	A system error occurred.	Contact Technical Support with the error information.

Symptom	Cause	Solution
You are experiencing duplex problems.	Media or settings are not correct.	For autoduplexing, make sure that you have a duplex option installed.
		Make sure that you are using correct media. ■ See “Media Specifications” on page 66. ■ Do not duplex envelopes, labels, postcards, thick stock, or transparencies. ■ Make sure that you have not mixed media types in Tray 1.
		Make sure that your document has more than one page.
		Make sure the duplex option is installed and declared in the Windows printer driver (Properties/Configure tab).
		In the Windows printer driver (Layout/Double-Sided), choose “Double-Sided.”
		For N-up on duplexed pages, choose Collate only in the Windows driver’s Paper Tab. Do not set collation in the application.
With N-up on multiple copies, the output is incorrect.	Both the driver and the application have been set for collation.	For N-up on multiple copies, choose Collate only in the Windows driver’s Paper Tab. Do not set collation in the application.
You hear unusual noises.	The printer is not level.	Place the printer on a flat, hard, level surface.
	The tray is not installed correctly.	Remove the tray that you are printing from and reinsert it completely into the printer.
	There is a foreign object stuck inside the printer.	Turn off the printer and remove the object. If you cannot remove it, contact Technical Support.

Symptom	Cause	Solution
The web-based utility cannot be accessed.	The PageScope Web Connection Administrator's password is incorrect.	The PageScope Web Connection Administrator password has a 6-character minimum and a 16-character maximum. For details of the PageScope Web Connection administrator password, refer to the magicolor 5450 Reference Guide on the Documentation CD-ROM.
Media is wrinkled. 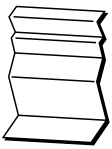	The media is moist from humidity or having water spilled on it.	Remove the moist media and replace it with new, dry media.
	The transfer roller or fuser unit is defective.	Check them for damage. If necessary, contact Technical Support with the error information.
	Unsupported media (wrong size, thickness, type, etc.) is being used.	Use KONICA MINOLTA-approved media. See "Media Specifications" on page 66.
The date and time is not correctly maintained on the printer.	The backup battery has reached the end of its service life.	Replace the backup battery. For details, see "Replacing the Backup Battery" on page 114.

Solving Problems with Printing Quality

Symptom	Cause	Solution
Nothing is printed, or there are blank spots on the printed page. 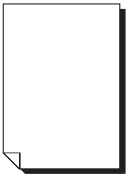	One or more of the toner cartridges may be defective.	Remove the toner cartridges and check it for damage. If it is damaged, replace it.
	The printer driver is not set correctly.	Select the proper setting in the printer driver to switch from transparencies to plain paper.
	The media is moist from humidity.	Adjust the humidity for media storage. Remove the moist media and replace it with new, dry media.
	The media set in the printer driver mismatches the media loaded in the printer.	Load the correct media in the printer.
	The power source does not match the printer specifications.	Use a power source with the proper specifications.
	Several sheets are being fed at the same time.	Remove the media from the tray and check it for static electricity. Fan plain paper or other media (but not transparencies), and replace it in the tray.
	Media is not set properly in the tray(s).	Remove the media, tap it to straighten it out, return it to the tray, and realign the media guides.
Entire sheet is printed in black or color.	One or more of the toner cartridges may be defective.	Remove the toner cartridges and check it for damage. If it is damaged, replace it.

Symptom	Cause	Solution
Image is too light; there is low image density.	Laser lens is dirty.	Clean the laser lens.
	The media is moist from humidity.	Remove the moist media and replace it with new, dry media.
	There is not much toner left in the cartridge.	Replace the toner cartridge.
	One or more of the toner cartridges may be defective.	Remove the toner cartridges and check them for damage. If one is damaged, replace it.
	The media type is set incorrectly.	When printing envelopes, labels, postcards, thick stock, or transparencies, specify the appropriate media type in the printer driver.
Image is too dark.	One or more of the toner cartridges may be defective.	Remove the toner cartridges and check them for damage. If one is damaged, replace it.
Image is blurred; background is lightly stained; there is insufficient gloss of the printed image.	One or more of the toner cartridges may be defective.	Remove the toner cartridges and check them for damage. If one is damaged, replace it.

Symptom	Cause	Solution
The print or color density is uneven. 	One or more of the toner cartridges may be defective or low.	Remove the toner cartridges and check them for damage. If one is damaged, replace it.
	The printer is not level.	Place the printer on a flat, hard, level surface.
Irregular print or mottled image appears. 	The media is moist from humidity.	Adjust the humidity in the media storage area. Remove the moist media and replace it with new, dry media.
	Unsupported media (wrong size, thickness, type, etc.) is being used.	Use KONICA MINOLTA-approved media. See “Media Specifications” on page 66.
	One or more of the toner cartridges may be defective.	Remove the toner cartridges and check it for damage. If it is damaged, replace it.
There is insufficient fusing or the image comes off when rubbed. 	The media is moist from humidity.	Remove the moist media and replace it with new, dry media.
	Unsupported media (wrong size, thickness, type, etc.) is being used.	Use KONICA MINOLTA-approved media. See “Media Specifications” on page 66.
	Media type is set incorrectly.	When printing envelopes, labels, postcards, thick stock, or transparencies, specify the appropriate media type in the printer driver.

Symptom	Cause	Solution
There are toner smudges or residual images.	One or more of the toner cartridges may be defective or installed incorrectly.	Remove the toner cartridges and check them for damage. If one is damaged, replace it.
There are toner smudges on the back side of the page (whether or not it has been duplexed).	The media transfer roller is dirty.	Clean the media transfer roller.
		If you think the transfer roller should be replaced, contact Technical Support with the error information.
	The media path is dirty with toner.	Print several blank sheets and the excess toner should disappear.
	One or more of the toner cartridges may be defective.	Remove the toner cartridges and check it for damage. If it is damaged, replace it.
Abnormal areas (white, black, or color) appear in a regular pattern. 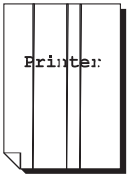	The laser lens is dirty.	Clean the laser lens.
	A toner cartridge may be defective.	Remove the toner cartridge with the color causing the abnormal image. Replace it with a new toner cartridge.

Symptom	Cause	Solution
Image defects.	The laser lens is dirty.	Clean the laser lens.
	A toner cartridge may be leaking.	Remove the toner cartridges and check them for damage. If one is damaged, replace it.
	A toner cartridge may be defective.	Remove the toner cartridge with the color causing the abnormal image. Replace it with a new toner cartridge.
Lateral lines or bands appear on image. 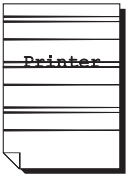	The printer is not level.	Place the printer on a flat, hard, level surface.
	The media path is dirty with toner.	Print several sheets and the excess toner should disappear.
	One or more of the toner cartridges may be defective.	Remove the toner cartridges and check them for damage. If one is damaged, replace it.
Colors look drastically wrong.	One or more of the toner cartridges may be defective.	Remove the toner cartridges and verify that the toner is distributed evenly on each cartridge roller, and reinstall the toner cartridges.
	One or more of the toner cartridges may be low or empty.	Check the control panel for an *X* `TONER LOW` or `TONER EMPTY X` message. If necessary, replace the specified toner cartridge.
Colors are not registering properly; colors are mixed or have page-to-page variation.	The front cover is not properly closed.	Make sure that the printer's front cover is closed.
	One or more of the toner cartridges may be defective.	Remove the toner cartridges and check them for damage. If one is damaged, replace it.
	The media is moist from humidity.	Remove the moist media and replace it with new, dry media.

Symptom	Cause	Solution
The color has a poor reproduction or has poor color density.	One or more of the toner cartridges may be defective.	Remove the toner cartridges and check them for damage. If one is damaged, replace it.

If the problem is not resolved, even after all of the above have been performed, contact Technical Support with the error information.

For contact information, refer to the magicolor 5450 General Information Guide.

Status, Error, and Service Messages

Status, error, and service messages are displayed in the control panel message window. They provide information about your printer and help you locate many problems. When the condition associated with a displayed message has changed, the message is cleared from the window.

Standard Status Messages

This message...	means...	do this...
CALIBRATING	After replacing a toner cartridge, or after rebooting your printer after environmental changes, your printer automatically pauses to do a 75-second Auto-Image Density Control (AIDC) cycle. This process is provided to make reliable printer operation with optimum output quality possible.	No action needed.
CANCELLING JOB	The job is being cancelled.	
COPYING	The printer is printing with the collating function.	
ENERGY SAVER	The printer is in Energy Saver mode to reduce power consumption during periods of inactivity. When a print job is received, the printer returns to normal power within 30 seconds.	
FIRMWARE UPDATE	The firmware is being updated.	
INITIALIZING	The printer is being initialized.	
PRINTING	The printer is printing.	
PROCESSING	The printer is processing data.	
READY	The printer is on and ready to receive data.	

This message...	means...	do this...
REBOOTING	The printer is being restarted.	No action needed.
WARMING UP	The printer is warming up.	

Error Messages (Warning: ⚠)

This message...	means...	do this...
FUSER UNIT END OF LIFE	The fuser unit has reached the end of its life.	Contact Technical Support with the error information.
HDD NEAR FULL	The hard disk is full.	Delete print jobs saved on the hard disk.
INCORRECT CART *X*	The *X* toner cartridge is an unapproved type.	Install a KONICA MINOLTA toner cartridge of the appropriate type (AM, EU, AP or JP), see page 95.
PAPER EMPTY TRAY *X*	Tray *X* (Tray 1, 2, 3, or 4) is empty. (Appears when SYS DEFAULT MENU/ ENABLE WARNING/PAPER EMPTY TRAY *X* is set to ON.)	Load media into the specified tray.
	Tray *X* (Tray 2, 3 or 4) is not correctly installed. (Appears when SYS DEFAULT MENU/ ENABLE WARNING/PAPER EMPTY TRAY X is set to ON.)	Correctly install the specified tray.
TONER EMPTY *X*	The *X* toner cartridge is empty.	Replace the toner cartridge.

This message...	means...	do this...
TONER LOW *X*	The *X* toner cartridge is low and should be replaced within 200 pages at 5% coverage of letter/A4 pages. (Appears when SYS DEFAULT MENU/ ENABLE WARNING/TONER LOW is set to ON.)	Prepare the specified color toner cartridge.
TRANS. BELT END OF LIFE	The transfer belt unit has reached the end of its life.	Replace the transfer belt unit and reset the counter in the QUALITY/ SUPPLIES/ REPLACE/ TRANS. BELT menu.
TRANS.ROLLER END OF LIFE	The transfer roller has reached the end of its life.	Replace the transfer roller and reset the counter in the QUALITY/ SUPPLIES/ REPLACE/ TRANS. ROLLER menu.
UNABLE TO COLLATE JOB	The hard disk is full. Print jobs over 10,000 pages cannot be collated.	Print one copy of the file at a time.
WASTE TONER NEAR FULL	The waste toner bottle is nearly full.	Prepare a new waste toner bottle.

Error Messages (Operator Call: ⚠)

This message...	means...	do this...
ADJUST TRAY1	Tray 1 was specified with the printer driver for printing, but Tray 1 is not installed.	Install Tray 1.
COVER OPEN DUPLEX COVER	The duplex cover is open.	Close the duplex cover.
COVER OPEN FRONT COVER	The printer's front cover is open.	Close the front cover.
COVER OPEN SIDE COVER	The printer's right side cover is open.	Close the right side cover.
COVER OPEN TRAY *X* COVER	The right side cover of Tray *X* (Tray 3 or 4) is open.	Close the right side cover of the tray.
FUSER MISSING CHECK UNIT	The fuser unit is not installed.	Contact Technical Support with the error information.
HOLD JOB ERROR UNABLE TO STORE JOB	The specified print job saved on the hard disk is sent while the hard disk is not installed.	Print jobs can be saved only if a hard disk is installed. If desired, install a hard disk.
MANUAL EMPTY "SIZE" "MEDIA"	Tray 1 was specified with the printer driver for printing, but Tray 1 is empty.	Load the correct media into Tray 1.
MANUAL FEED "SIZE" "MEDIA"	The Paper Source in the printer driver is set to Tray 1 (Manual Feed), but there is already media in the tray when printing begins.	Press the Up key to print, or remove and reload the paper in Tray 1.

This message...	means...	do this...
MEMORY FULL PRESS CANCEL	The printer has received more data than can be processed with its internal memory.	Press the Cancel key to cancel the print job. Decrease the amount of data to be printed (for example, by decreasing the resolution), and then try printing again. If that doesn't solve the problem, install an optional memory module.
OUTPUT FULL REMOVE PAPER	The output tray is full of paper.	Remove all paper from the output tray.
PAPER EMPTY "SIZE" "MEDIA"	The specified tray is empty. (Appears when PAPER/ PAPER SOURCE/ TRAY CHAINING ON is set.)	Load the correct media into the specified tray.
PAPER ERROR "SIZE" "MEDIA"	The media size/type set in the printer driver is different from the size/type of media loaded (Appears when PAPER/ PAPER SOURCE/ TRAY CHAINING ON is set.)	Load the correct media size and type.

This message...	means...	do this...
PAPER JAM DUPLEX 1	Media has misfed in the duplex option.	Press the Down key to display the help screen. Follow the instructions in the help screen to remove the misfed media.
PAPER JAM DUPLEX 2	Media has misfed in the duplex option.	
PAPER JAM FUSER/EXIT	Media has misfed leaving the fuser area.	
PAPER JAM SECOND TRANS	Media has misfed in the transfer roller area. This type of misfeed means that the media did not make it to the paper exit area.	
PAPER JAM TRAY1	Media has misfed in Tray 1.	
PAPER JAM TRAY *X*	Media has misfed while being pulled from the specified tray (Tray 2, 3, or 4).	
PAPER JAM VERTICAL TRANS	Media has misfed in the vertical transfer area.	
TONER EMPTY REPLACE *X*	The *X* toner cartridge is completely empty. This message appears when the SYS DEFAULT/ TONER EMPTY menu is set to STOP.	Replace the toner cartridge.
TONER MISSING CHECK *X*	The *X* toner cartridge is not installed, or an unapproved toner cartridge is installed.	Install a correct KONICA MINOLTA toner cartridge.

This message...	means...	do this...
Tray *X* EMPTY "SIZE" "MEDIA"	The *X* (Tray 2, 3, or 4) was specified with the printer driver for printing, but Tray *X* is empty. This message appears when the PAPER/PAPER SOURCE/TRAY CHAINING menu is set to OFF.	Load the correct media into the specified tray.
TRAY *X* PAPER ERR "SIZE" "MEDIA"	The media size/type set in the printer driver is different from the size/type of media loaded. This message appears when the PAPER/PAPER SOURCE/TRAY CHAINING menu is set to OFF.	Load the correct media size and type.
TRAY *X* SIZE ERR ADD "SIZE"	The media size set in the printer driver is different from the size of media loaded.	Load the correct media size into the specified tray.
TRAY *X* TYPE ERR ADD "MEDIA"	The media type set in the printer driver is different from the type of media loaded.	Load the correct media type into the specified tray.
WASTE TONER FULL REPLACE BOTTLE	The waste toner bottle is full.	Install a new waste toner bottle.

Service Messages:

These messages indicate a more serious error that can only be corrected by a customer service engineer. If one of these messages appears, turn the printer off, then turn it on again. If the problem persists, contact your local vendor or authorized service provider.

This service message...	means...	do this...
SERVICE CALL *XXXX* "Error"	An error has been detected with the item indicated "*XXXX*" in the service message. Information about errors appears at the bottom of the message window.	Reboot the printer. This often clears the service message, and printer operation can resume. If the problem persists, contact Technical Support.

10 Installing Accessories

Introduction

Note

Use of accessories not manufactured or supported by KONICA MINOLTA will void your warranty.

This chapter provides information about the following accessories.

Dual In-Line Memory Module (DIMM)	256 MB, 512 MB DIMM (DDR-SDRAM, 266 MHz, 184 pins, No ECC, Unbuffered, CL=2 or 2.5)
Duplex Option	Auto duplexing
Lower Feeder Unit (Tray 3/4)	500-sheet tray included
Hard Disk	40 GB Hard Disk

Note

Installing accessories always requires that the printer and accessories are turned off and unplugged during installation.

Antistatic Protection

Note

It's very important to protect the printer controller board from electrostatic damage while performing any task involving the controller board.
Turn off all power switches first. If an antistatic wrist strap is provided in your printer option kit, attach one end of it to your wrist and the other end to the bare metal chassis on the back of your printer. Never attach the wrist strap to any piece of equipment with an electrical current present. Plastic, rubber, wood, painted metal surfaces, and telephones are not acceptable grounding points.
If you don't have an antistatic wrist strap, discharge your body's static electric charge by touching a grounded surface before you handle any printer boards or components. Also avoid walking around after grounding yourself.

Dual In-Line Memory Module (DIMM)

You may need additional memory (DIMM) for complex graphics and for duplex printing.

Dual in-line memory module (or DIMM) is compact circuit board with surface-mount memory chips.

The printer, which has two memory slots, has a 256 MB memory module already installed in one of the slots. By using both slots, the memory can be expanded to a maximum of 1024 MB (512 MB + 512 MB).

Installing a DIMM

Note

It's very important to protect the printer controller board and any associated circuit boards from electrostatic damage. Before performing this procedure, review the antistatic caution on page 170. In addition, always handle circuit boards by the edges only.

1 Turn off the printer and disconnect the power cord and interface cables.

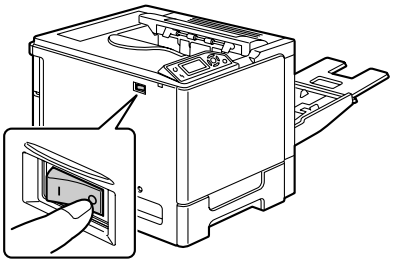

2 Using a screwdriver, remove the screw. Then, slide the rear cover to the right and remove it.

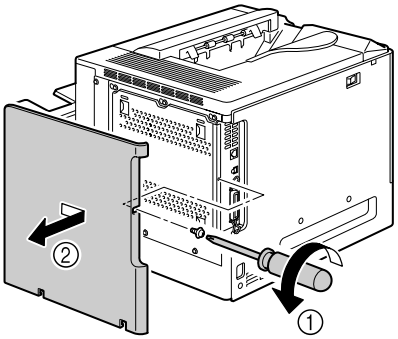

3 Using a screwdriver, loosen the seven screws. (Do not remove them from the printer.)

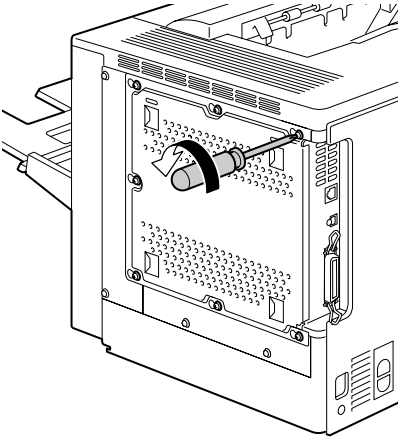

4 Slide the panel slightly to the right and lift it off the printer.

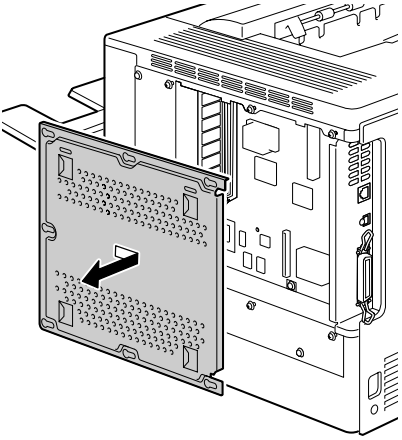

5 Insert the new DIMM straight into the DIMM connector until the latches snap into the locked position.

Observe the keyed side of the DIMM to align it with the connector. If you cannot snap the DIMM into place, do not force it. Reposition it, making sure that the DIMM is seated completely in the connector.

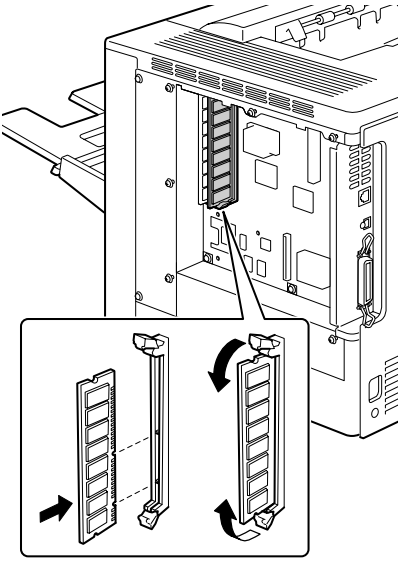

6 Reinstall the panel and tighten the seven screws.

7 Attach the rear cover.

8 Reconnect all interface cables.

9 Reconnect the power cord, and turn on the printer.

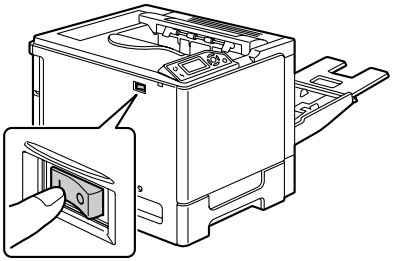

10 Declare the additional RAM in the Windows printer driver (Properties/Configure tab).

11 Print a configuration page (`PRINT/CONFIGURATION PG`) and verify that the total amount of the RAM installed in your printer is listed.

Hard Disk

If a hard disk is installed, fonts can be downloaded and saved, and the overlay function can be used.

Installing the Hard Disk

Note

It's very important to protect the printer controller board and any associated circuit boards from electrostatic damage. Before performing this procedure, review the antistatic caution on page 170. In addition, always handle circuit boards by the edges only.

1 Turn off the printer and disconnect the power cord and interface cables.

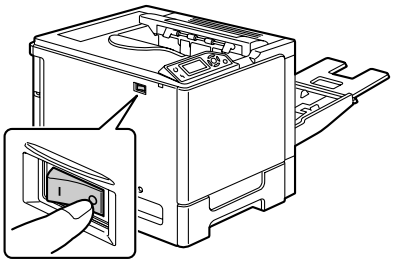

2 Using a screwdriver, remove the screw. Then, slide the rear cover to the right and remove it.

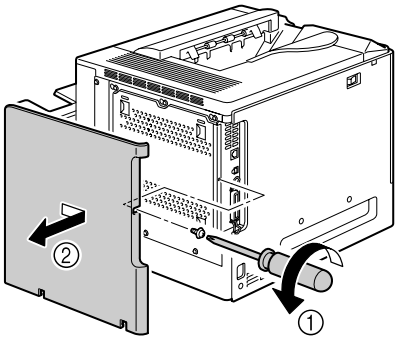

3 Using a screwdriver, loosen the seven screws. (Do not remove them from the printer.)

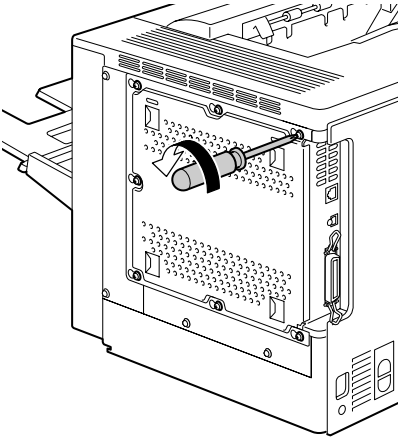

4 Slide the panel slightly to the right and lift it off the printer.

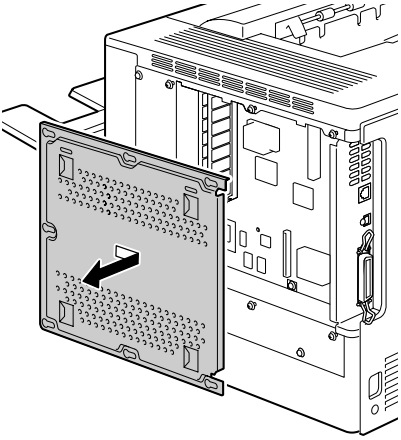

5 Plug the cable on the hard disk into the connector on the controller board.

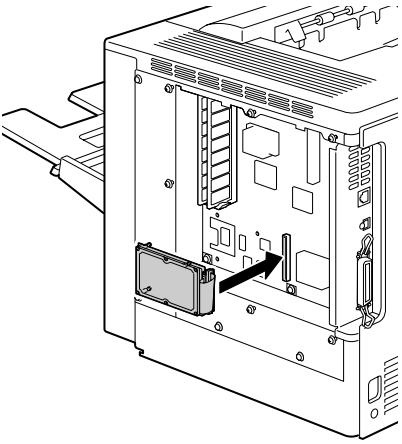

6 Insert the three mounting pins on the hard disk into the holes in the controller board to mount the hard disk onto the controller board.

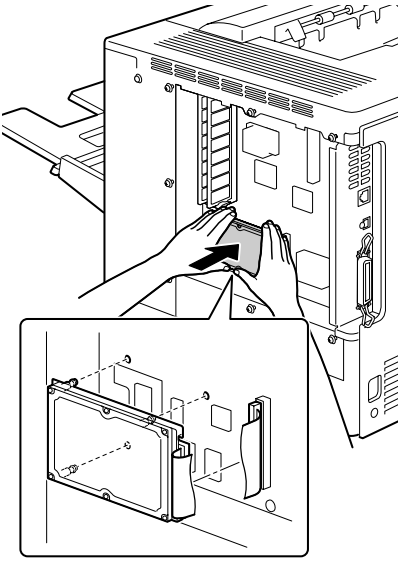

7 Reinstall the panel and tighten the seven screws.

8 Attach the rear cover.

9 Reconnect all interface cables.

10 Reconnect the power cord, and turn on the printer.

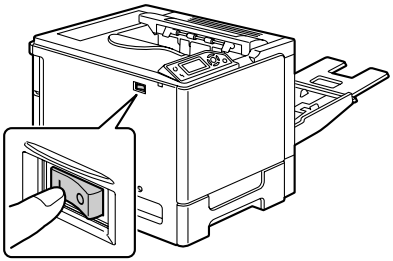

11 Declare the hard disk in the Windows printer driver (Properties/Configure tab).

Duplex Option

Duplex (2-sided) printing can be performed automatically with the duplex option and enough memory installed. See “Duplexing” on page 90.

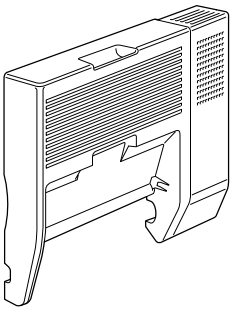

Installing the Duplex Option

1 Turn off the printer.

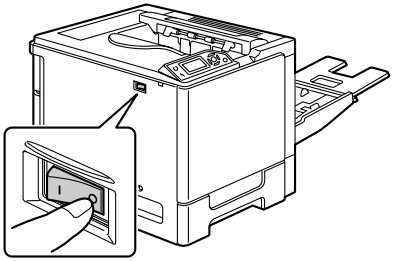

2 Remove the cover on the right side cover.

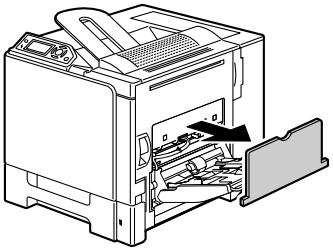

3 Remove the door at the side of the right side cover.

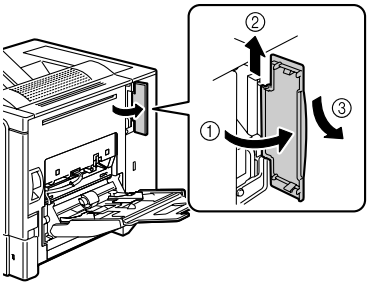

4 Prepare the duplex option.

Before installing the duplex option, open the duplex cover, and then check that the knob is positioned as shown in the illustration. Then, close the duplex cover.

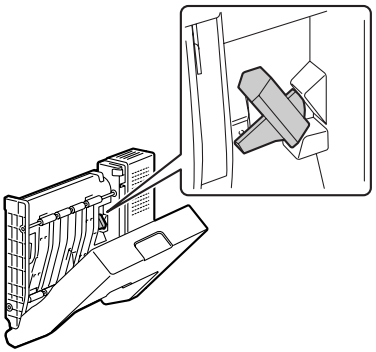

5 Attach the duplex option, as shown in the illustration.

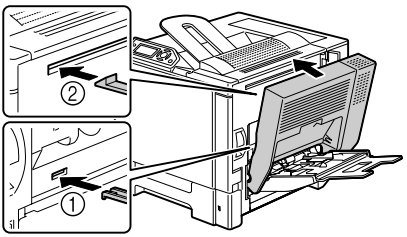

6 Open the duplex cover, and then turn both knobs counterclockwise until they are horizontal to secure the duplex option to the right side cover. Then, close the duplex cover.

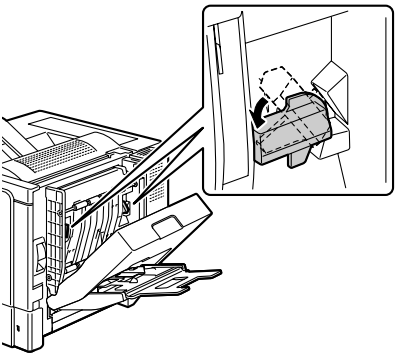

7 Pull the lever, open the right side cover, and then attach the support wire for the duplex option to the printer.

Before opening the right side cover, fold up Tray 1.

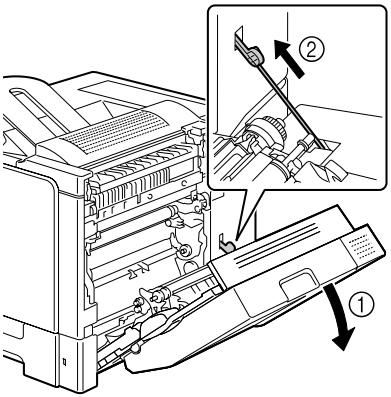

8 Close the right side cover.

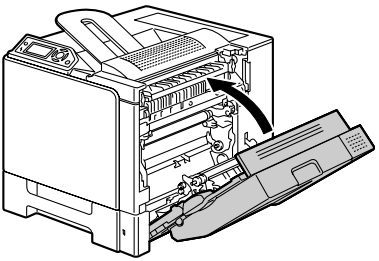

9 Declare the duplex unit in the Windows printer driver (Properties/Configure tab).

Lower Feeder Unit

You can install up to two optional lower feeder units (Trays 3 and 4). Each lower feeder unit increases your printer's media feed capacity by 500 sheets.

Kit Contents

- Lower feeder unit with a tray (500-sheet capacity)
- Four metal brackets
  - Two front brackets
  - Two rear brackets
- Four securing screws
- Transport guide (used only for Tray 3)

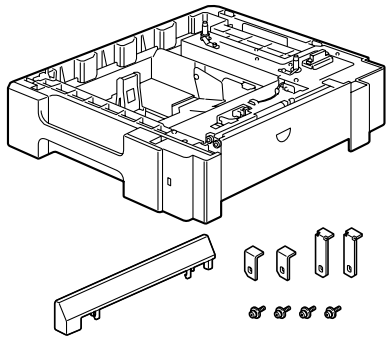

Installing a Lower Feeder Unit

Note

Since consumables are installed in the printer, be sure to keep the printer level when moving it in order to prevent accidental spills.

1 Turn off the printer and disconnect the power cord and interface cables.

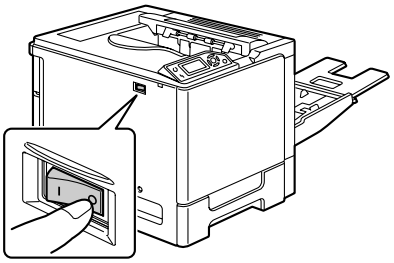

2 Prepare the lower feeder unit.

Be sure to place the lower feeder unit on a level surface.

3 Open the right side cover of the lower feeder unit.

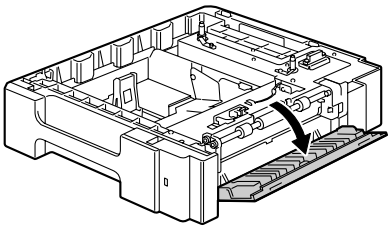

The right side cover of the lower feeder must be opened before the feeder can be installed onto the printer.

4 With another person's help, place the printer on top of the lower feeder unit, making sure that the positioning pins on the lower feeder unit correctly fit into the holes on the bottom of the printer.

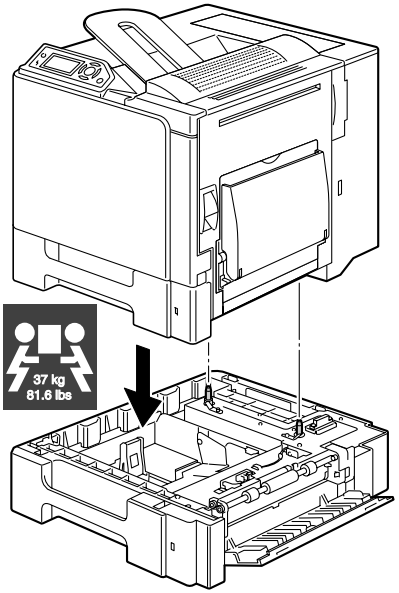

If two lower feeder units are to be installed, stack the two lower feeder units and secure them together before installing them to the printer.

WARNING!

This printer weighs approximately 37 kg (81.6 lb) when it is fully loaded with consumables. The printer must be lifted by two people.

5 Using a screwdriver, install the two securing brackets at the rear of the printer.

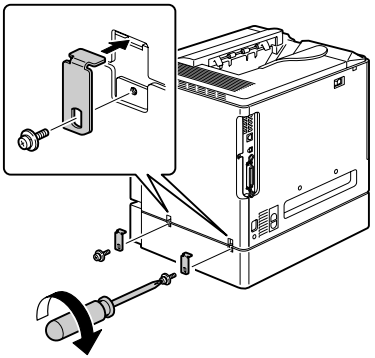

6 Pull out the trays.

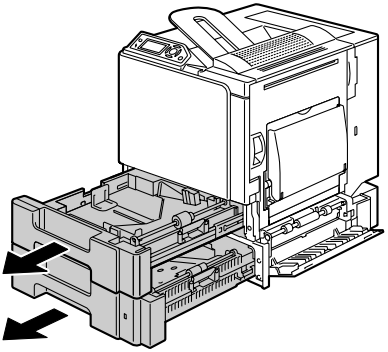

7 Install the two securing brackets at the front of the printer.

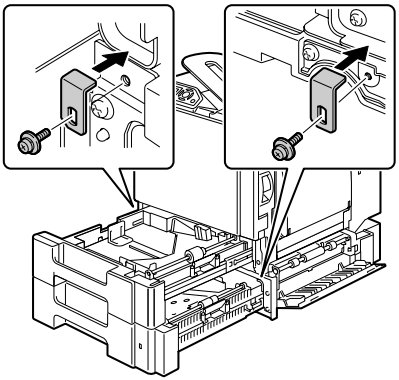

8 Close the trays.

9 Attach the transport guide to the right door of Tray 3.

It is not necessary to attach the transport guide to the right door of Tray 4.

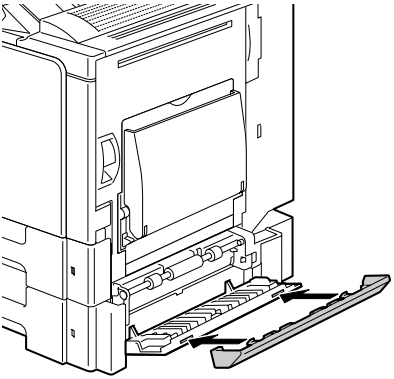

10 Close the right side cover of the lower feeder unit.

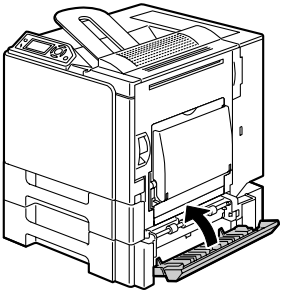

11 Declare Tray 3 (Tray 4) in the Windows printer driver (Properties/Configure tab).

Appendix A

Safety Specifications

Printer		
Safety standards	U.S. model	UL 60950-1, CSA C22.2 No. 60950-1-03
	European model	EU Directive 73/23/EEC EU Directive 93/68/EEC EN 60950-1 (IEC 60950)
	China model	GB 4943
EMC standards	U.S. model	FCC part 15 subpart B class B ICES-003
	European model	EU Directive 89/336/EEC EU Directive 93/68/EEC EN 55022 (CISPR Pub. 22) class B EN 61000-3-2 EN 61000-3-3
	China model	GB 9254 class B, GB 17625.1
	Australian model	EN 55022 class B

Technical Specifications

Printer

Type	Desktop full color tandem laser beam printer
Print system	Semiconductor laser beam scanning + Dry electron photography method
Exposure system	4 laser diode and polygon mirror
Developing system	Mono-component SMT
Resolution	600 dpi × 600 dpi × 4 bits

First print	Simplex Monochrome/Full color: 14.2 seconds for A4 (plain paper) Monochrome/Full color: 14.1 seconds for Letter (plain paper) Duplex Monochrome/Full color: 22.3 seconds for A4, Letter (plain paper)
Print speed	Simplex Monochrome/Full color: 25.6 pages per minute for A4 (plain paper) Monochrome/Full color: 27 pages per minute for Letter (plain paper) Duplex Monochrome/Full color: 12.3 pages per minute for A4 (plain paper) Monochrome/Full color: 12.5 pages per minute for Letter (plain paper)
Warm-up time	Avg. 30 seconds
Media sizes	Tray 1 (Manual feed tray) Paper width: 92 to 216 mm (3.6 to 8.5") Paper length: 148 to 355.6 mm (5.8 to 14.0") Tray 2 A4/Letter Trays 3 and 4 (Optional) B5 - Legal
Paper/Media	• Plain paper (60 to 90 g/m^2; 16 to 24 lb bond) • Recycled paper (60 to 90 g/m^2; 16 to 24 lb bond) • Transparencies • Envelopes • Thick Stock 1 (91 to 150 g/m^2) • Thick Stock 2 (151 to 210 g/m^2) • Postcard • Letterhead • Label sheets • Glossy Stock

Input capacity	Tray 1 (Manual feed tray) Plain/Recycled paper: 100 sheets Envelope: 10 envelopes Label/Postcard/Thick Stock/Glossy Stock Transparency/Letterhead: 20 sheets Tray 2 Plain/Recycled paper: 500 sheets Tray 3 and 4 (Optional) Plain/Recycled paper: 500 sheets
Output capacity	Output tray: 250 sheets (A4, Letter)
Operating temperature	10 to 35°C (50 to 95°F)
Operating humidity	15 to 85%
Power supply	110 to 127 V, 50 to 60 Hz 220 to 240 V, 50 to 60 Hz
Power consumption	120 V: 1250 W 230 V: 1250 W Energy Saver Mode: 42.9 W or less
Amperage	110 to 127 V: 11 A or less 220 to 240 V: 6 A or less
Acoustic Noise	Printing: 54 dB or less Standby: 39 dB or less
External dimensions	Height: 440 mm (17.3") Width: 455 mm (17.9") Depth: 520 mm (20.5")
Weight	Printer: approximately 31 kg (68.3 lb) Toner cartridge: Standard in-box cartridge = 1.42 kg (3.13 lb) (Y, M, C)/ 1.46 kg (3.22 lb) (K) Replacement cartridge (Standard-Capacity)= 1.52 kg (3.35 lb) (Y, M, C)/ 1.55 kg (3.42 lb) (K) Replacement cartridge (High-Capacity)= 1.65 kg (3.64 lb) (Y, M, C)/ 1.68 kg (3.70 lb) (K)
Interface	USB 2.0 (High Speed) compliant, 10Base-T/ 100Base-TX/1000Base-T Ethernet, Parallel
CPU	Freescale PowerPC7447A 667 MHz
Standard memory	256 MB

Consumable Life Expectancy Chart

User-Replaceable

Item	Average Life Expectancy
Toner cartridge	**Standard in-box Cartridge**: Printed within a constant environment 3,000 pages or more (Continuous) 2,750 pages or more (2 pages per job) Printed outside of a constant environment 2,400 pages or more (Continuous) 2,200 pages or more (2 pages per job) **Replacement Cartridge (Standard-Capacity):** Printed within a constant environment 6,000 pages or more (Continuous) 5,500 pages or more (2 pages per job) Printed outside of a constant environment 4,800 pages or more (Continuous) 4,400 pages or more (2 pages per job) **Replacement Cartridge (High-Capacity):** Printed within a constant environment 12,000 pages or more (Continuous) 11,000 pages or more (2 pages per job) Printed outside of a constant environment 9,600 pages or more (Continuous) 8,800 pages or more (2 pages per job)
Waste toner bottle	40,000 pages (Monochrome) 10,000 pages (Full color)
Transfer roller	120,000 pages
Transfer unit	120,000 pages (Continuous) 100,000 pages (2 pages per job)
Note: A constant environment is one with a temperature between 15 °C [59 °F] and 25 °C [77 °F] and humidity between 35% and 70%.	

The values shown for the toner cartridge and waste toner bottle indicate the number of pages for simplex printing using A4/Letter-size media with 5% coverage.
The actual life may differ (be shorter) depending on the printing conditions (coverage, paper size, etc.), differences in the printing method, such as continuous printing or intermittent printing (when print jobs of one page are often printed), or the type of paper used, for example, thick paper. In addition, the life will be affected by the temperature and humidity of the operating environment.

Service-Replaceable

Item	Average Life Expectancy
Fuser unit	150,000 pages (Continuous) 130,000 pages (2 pages per job)
Media feed roller	300,000 pages

Our Concern for Environmental Protection

As an ENERGY STAR® Partner, we have determined that this machine meets the ENERGY STAR Guidelines for energy efficiency.

What is an ENERGY STAR product?

An ENERGY STAR product has a special feature that allows it to automatically switch to a “low-power mode” after a period of inactivity. An ENERGY STAR product uses energy more efficiently, saves you money on utility bills and helps protect the environment.

Index

A

Accessories 170
- DIMMs 171
- Duplex option 178
- Hard disk 174
- Lower feeder unit 181

Antistatic protection 170

C

Camera direct 64
Configuration menu 31
Consumables
- Backup battery 114
- Ozone filter 108
- Toner cartridge 94
- Transfer belt unit 109
- Transfer roller 104
- Waste toner bottle 102

Control panel 28

D

Dual in-line memory module 171
Duplexing 90
- Duplex option 178

E

Electrostatic discharge 170
Envelopes 69
Error messages 161

G

Glossy Stock 73

H

Hard disk 174

I

Imageable area 74

L

Labels 70
Letterhead 71
Loading media 75
Lower feeder unit 181

M

Maintenance 120
Media
- Clearing misfeeds 131
- Imageable area 74
- Loading 75
- Path 130
- Preventing misfeeds 129

Media misfeed
- Duplex option 139
- Fuser unit 140
- Transfer roller 143
- Tray 1 143
- Tray 2 133
- Tray 3 and 4 137

Media path 130
Media storage 92
Media type
- Envelopes 69
- Glossy stock 73
- Labels 70
- Letterhead 71
- Plain paper 67
- Postcards 71
- Thick stock 68
- Transparencies 72

Message window 30
Messages 160
Misfeed problems 146
- Clearing 131
- Media path 130
- Preventing 129

O

Output tray 91

P

Plain paper 67
Postcards 71
Preventing media misfeeds 129
Print quality 154
Printer
- Parts 3

Printer driver (Postscript, PCL) 15
- Advanced tab 16
- Basic tab 17
- Cover page tab 18
- Displaying 14
- Layout tab 17
- Overlay tab 18
- Quality tab 19
- Uninstalling 13
- Version tab 19
- Watermark tab 18

Printer driver (PPD) 20
- Displaying 14
- Graphics tab 21
- Paper tab 20
- Uninstalling 13

S

Service messages 167
Status monitor 24
- Opening 24
- Using 24

T

Thick stock 68
Transparencies 72
Troubleshooting 127