Dell™ UltraSharp U2417HA

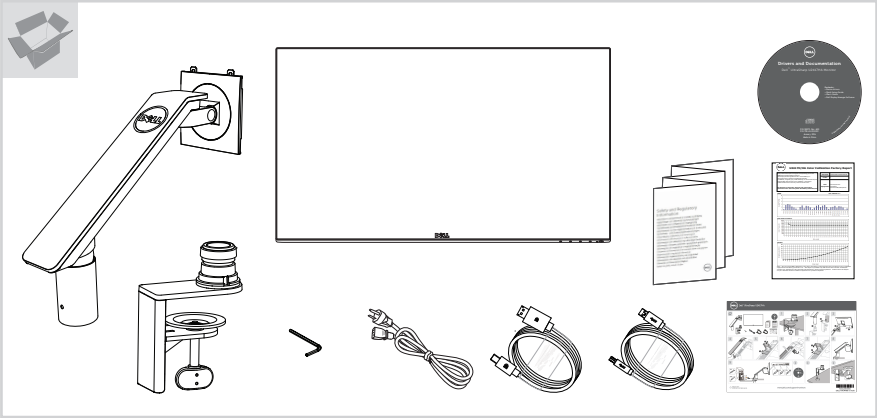

1

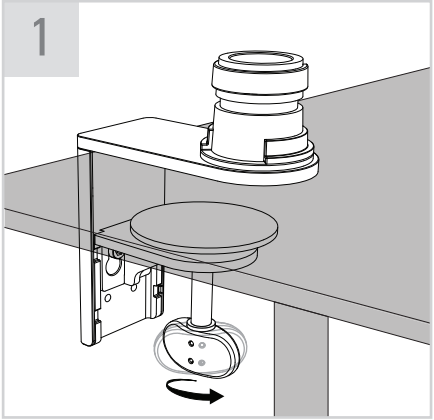

2

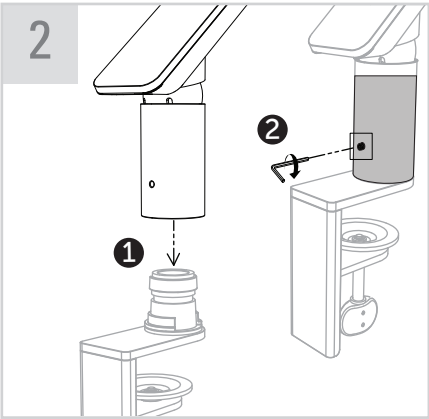

3

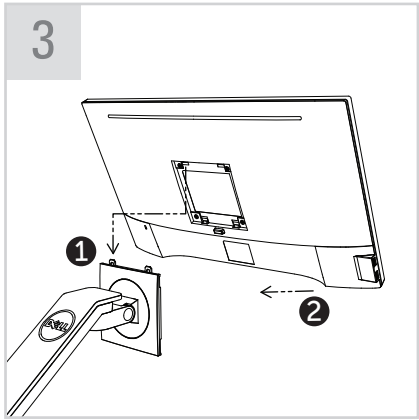

4

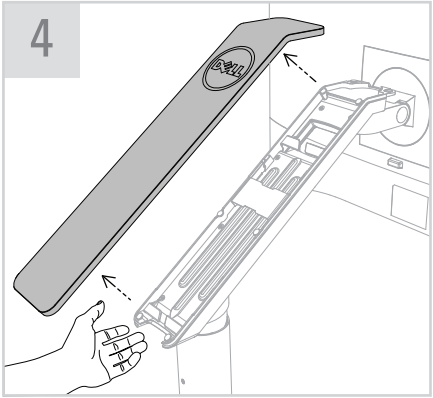

5

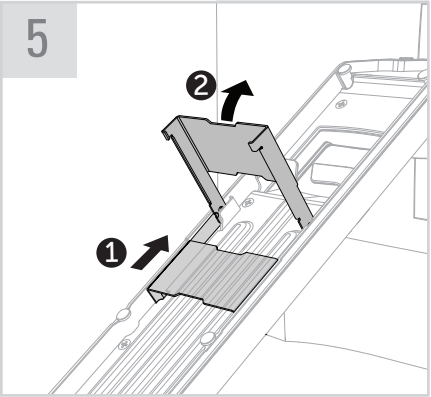

6

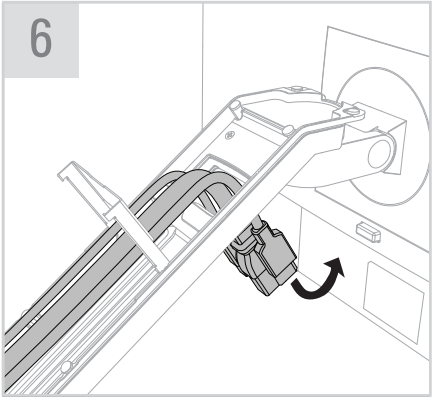

7

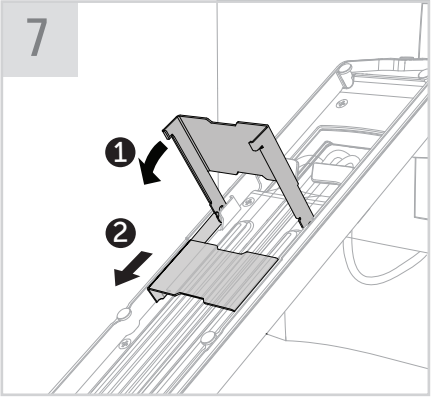

8

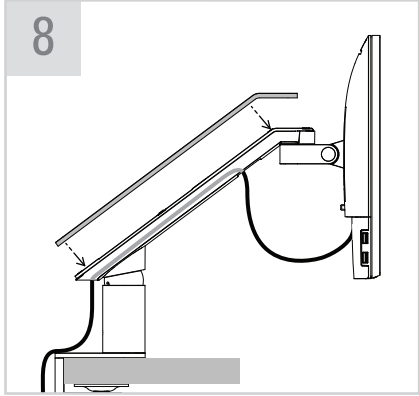

9

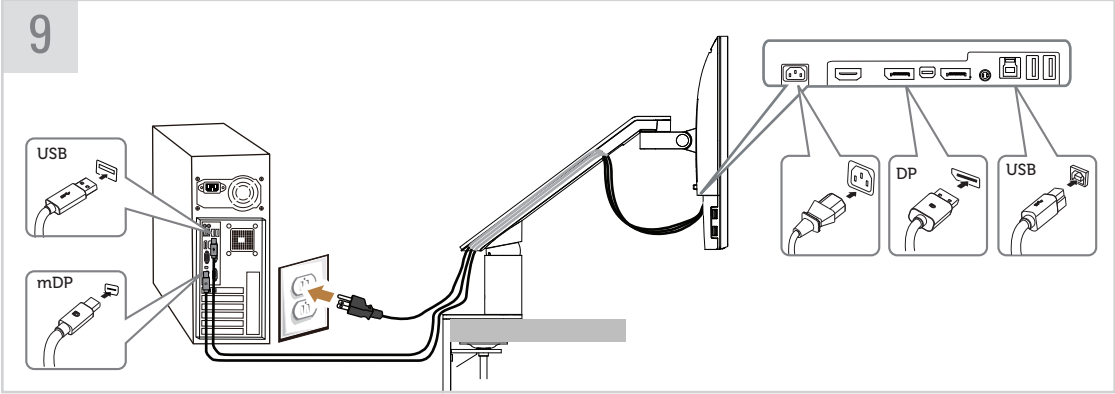

i

i

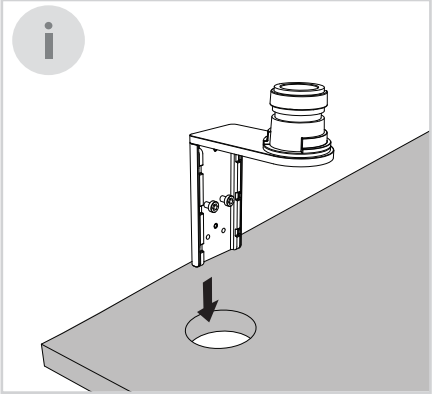

i

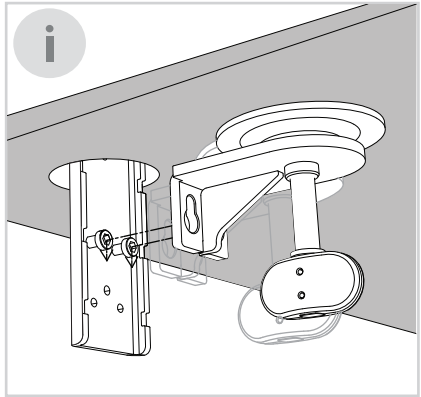

Printed in China.
© 2016 Dell Inc. All rights reserved.

www.dell.com/support/monitors

746.A1405.0001
(DELL P/N:94M83 rev.A00)